jp thomson architects ltd
2001 Provincial Rd, Unit 6A, Windsor, Ontario, N8W 5V7
www.jpthomson.com w
519-256-3131 t
519-256-0663 f

ADDENDUM No. 3

Document No.: **ADD-003**
Date: May 19, 2026

Project Title: **WCDSB St. Greg Addition**
Project No.: **25-106 – WCDSB Tender RFT 2026-01**
Owner: Waterloo Catholic District School Board
Prime Consultant: J.P. Thomson Architects Ltd.

This Addendum is issued before the award of Contract to inform the Contractor of supplemental information or information which supersedes the work described in the Plans and Specifications dated April 09, 2026 and shall become part thereof.
The Contractor shall furnish all materials and labour required for completion of the work described including all incidental or necessary items required to complete the work even though not specifically mentioned.

Item No. 3.1	Refer to Specifications, Section 01 31 10. .1 Add Item 1.5 – PHASING AND SEQUENCING OF WORK .1 Construction shall be phased and sequenced to maintain the school in full operation at all times throughout the duration of the Work. No program component or functional area of the school, including but not limited to classrooms, library spaces, administrative areas, washrooms, or other educational/support spaces, shall be rendered unavailable during the school year or in a manner that would prevent occupancy and operation at the commencement of any school year. As a minimum, construction of the new addition shall commence immediately and be substantially undertaken as a separate exterior phase independent of ongoing school operations. Interior renovation work shall be carefully phased and coordinated to occur during the 2026 and 2027 summer shutdown periods, with interim work during the school year limited to activities that do not disrupt school operations or occupant safety. The roofing replacement scope shall be scheduled and completed exclusively during summer periods. The Contractor shall prepare and maintain a detailed phasing, sequencing, and occupancy plan identifying all temporary measures, access routes, safety controls, and turnover milestones necessary to support continuous school operation throughout construction. .2 The General Contractor shall account for all Shift Premium Costs, Overtime Costs etc. to meet the Substantial Performance date in conjunction with the phasing plan, provided by the General Contractor. .3 School Hours are as follows: 8:30 am – 3:00 pm.
Item No. 3.2	Refer to attached drawing, A-400 .1 Add General Notes & Legend .2 Revise East Elevation to match A-201.
Item No. **3.2**	Refer to attached drawing, A-202 .1 Revise Roofing Legend for legibility.
Item No. 3.3	Refer to attached structural drawings, S-100 – S-400

	.1 Revise footing F5, F6, F7 .2 Remove door to match architectural drawings.
Item No. 3.4	Questions and Answers Question 1: After reviewing the structural drawings, we were unable to locate footing F5. Could you please confirm whether this footing is required? If so, please indicate its location. Answer 1: Refer to above Question 2: Due to the length of the project, please advise if an asphalt index will be applied, similar to MTO asphalt index. Answer 2: Granular backfill is required under all pavement areas. Question 3: Please specify the CB trap type and approved vendor. Answer 3: CB taps are not required as per civil drawings. Question 4: Please specify the sump pit catch basin safety cover type, vendor and the required locations as the notation 'SPCB' was not noted during review of the civil drawings. Answer 4: Refer to C-100. Sump Pit Catch Basins are to be 300 mm in diameter with a cast iron gate. To be supplied by Underground Specialties. Question 5: As per note on C-101, please clarify the scope of work performed by the City Environmental Services Division, ie. what is the delineation points of responsibility between Contractor and City (ex. trenching, backfill, surfacing, removals, etc.) Answer 5: City Environmental Services to complete the servicing, including surface removals, servicing removals/abandonment and surface restoration. Question 6: Please advise on a footing founding elevation for the building and extents for tender purposes due to the 3.98m recommended depth recorded in BH1 Answer 6: Refer to above Question 7: Please confirm that subgrade remediation will be dealt with as a change due to the BH1 results and the impacts those soils will have on foundations, building slab and asphalt paving. Answer 7: All required remediation is to be included in base bid. Question 8: Can you please confirm the working hours in the existing school and the new addition? Thank you. Answer 8: Refer to above Question 9: s the millwork cash allowance expected to cover the costs of the full millwork scope of work? Or is it only to cover work that is not shown on the drawings that will be determined at a later date? Answer 9: The Millwork Cash Allowance is intended to cover unforeseen conditions.

	Question 10: Can you please confirm that there is no vertical reinforcement required besides the dowels, and bars at corners, openings and ends for the masonry walls? Answer 10: Refer to architectural Question 11: Section 08 80 50 outlines the GL-1 glazing composition intended for exterior glazing units. However, for the interior door and sidelite infill glazing, the specification states that the glazing thickness is to be as indicated on the drawings. The drawings, however, do not identify the glazing thickness and instead refer back to the specification. Additionally, the drawings do not specifically indicate which glazing type is to be used for the exterior units. It is being assumed that GL-1 applies to the exterior glazing assemblies based on the specification. Please confirm the required glazing composition and thickness for: Exterior glazing units. Interior door and sidelite infill glazing assemblies. Answer 11: All exterior insulated units are to be GL-1. All interior glazing thicknesses to be designed by glazing engineer as per the specifications item 1.4.1.3.7. Question 12: Where on plan does 6-A400 look? Is this existing or new? Answer 12: Refer to key plan on A-400. Question 13: The east elevation does not match the plan. Elevation overall measures 22 or so metres from the existing brick wing close to grid A.1 and on plan it is dimensioned as 18m, I highlighted the area that does not match. See attached to screenshots. Answer 13: Refer to above. Question 14: What are the reinforcing requirements for the pier at vestibule V01? Arch shows rebar in the block but struct does not show a section or a detail or define any requirements. Additionally, arch shows a sign bolted to the block structure with a bond beam which also appears not to be engineered. Majority of the arch wall sections show rebar detailed but the structural does not call for any. Answer 14: Refer to architectural at this location. Question 15: 14/S200 cuts through the door on C.1 which I think is actually 14/S400 indicates lintel L3, then says see plan and the plan says LX which is not on the lintel schedule. Please confirm lintel L3 is the correct lintel. Answer 15: L3 is the correct lintel.
	End of Addendum 003

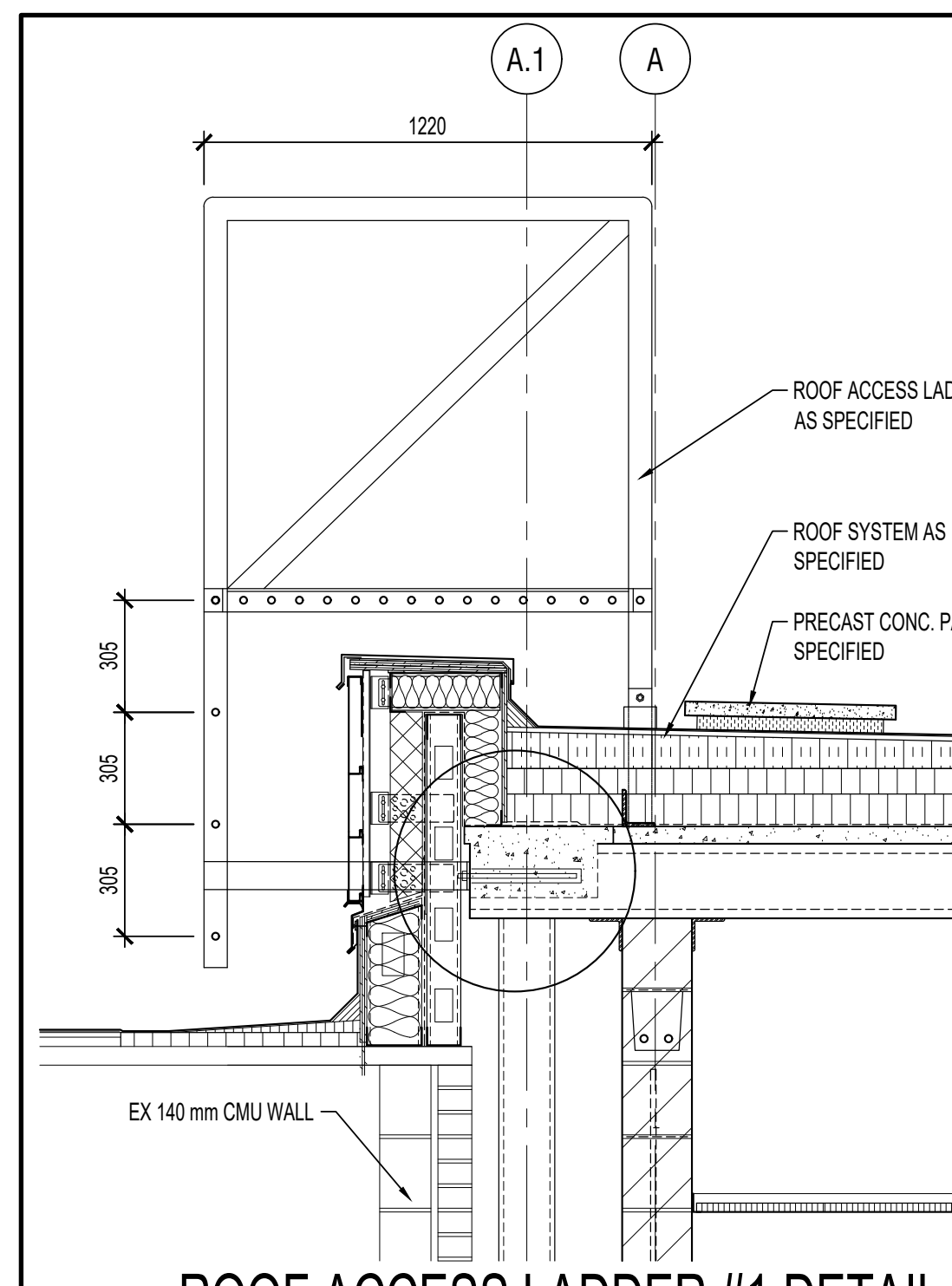
A.1
A
1220
ROOF ACCESS LADDER AS SPECIFIED
ROOF SYSTEM AS SPECIFIED
PRECAST CONC. PADS AS SPECIFIED
305
305
305
EX 140 mm CMU WALL

ROOF ACCESS LADDER #1 DETAIL

SCALE: 1:20

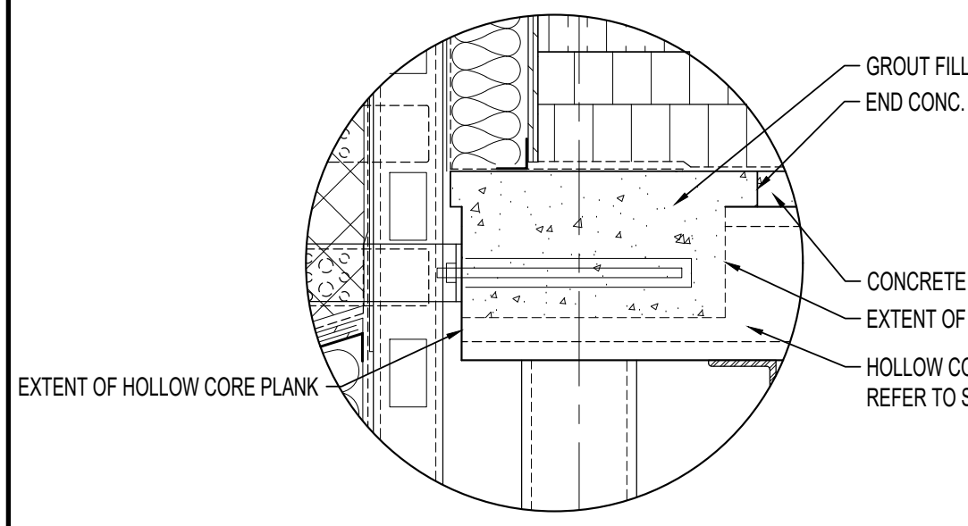
GROUT FILL
END CONC. TOPPING
CONCRETE TOPPING
EXTENT OF HOLLOW CORE PLANK
HOLLOW CORE PLANK REFER TO STRUCTURAL
EXTENT OF HOLLOW CORE PLANK

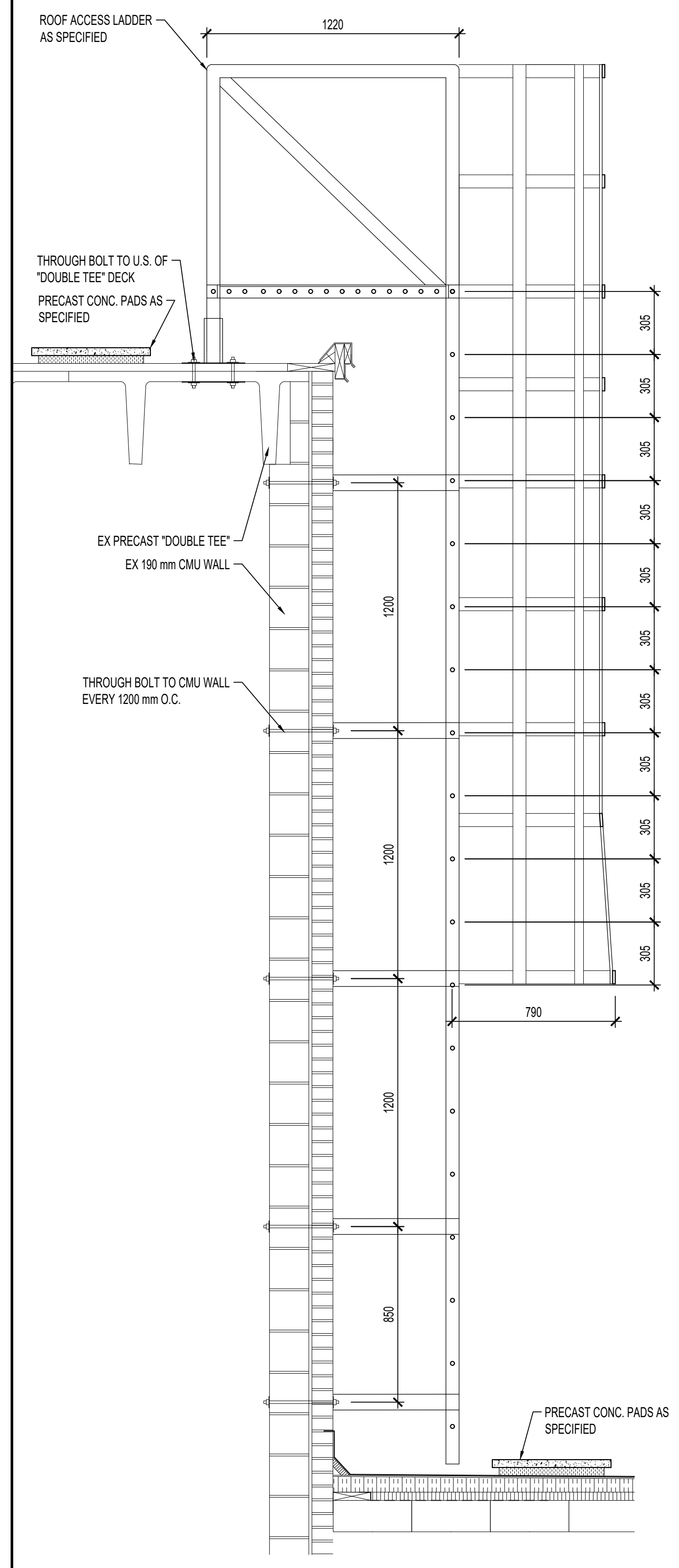
ROOF ACCESS LADDER AS SPECIFIED
1220
THROUGH BOLT TO U.S. OF "DOUBLE TEE" DECK
PRECAST CONC. PADS AS SPECIFIED
EX PRECAST "DOUBLE TEE"
EX 190 mm CMU WALL
THROUGH BOLT TO CMU WALL EVERY 1200 mm O.C.
305
1200
1200
1200
850
790
PRECAST CONC. PADS AS SPECIFIED

ROOF ACCESS LADDER #2 DETAIL

SCALE: 1:20

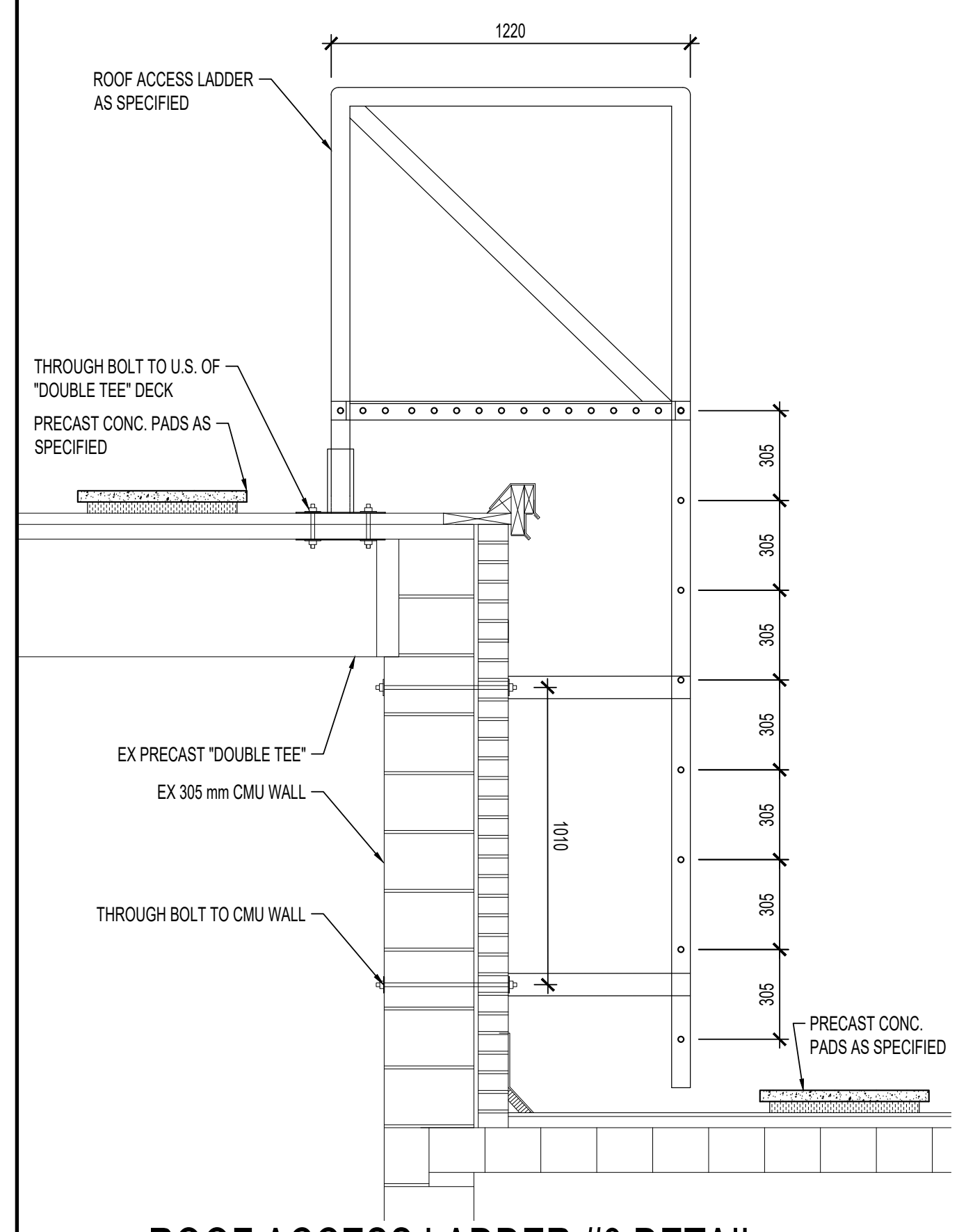
1220
ROOF ACCESS LADDER AS SPECIFIED
THROUGH BOLT TO U.S. OF "DOUBLE TEE" DECK
PRECAST CONC. PADS AS SPECIFIED
EX PRECAST "DOUBLE TEE"
EX 305 mm CMU WALL
THROUGH BOLT TO CMU WALL
305
1010
PRECAST CONC. PADS AS SPECIFIED

ROOF ACCESS LADDER #3 DETAIL

SCALE: 1:20

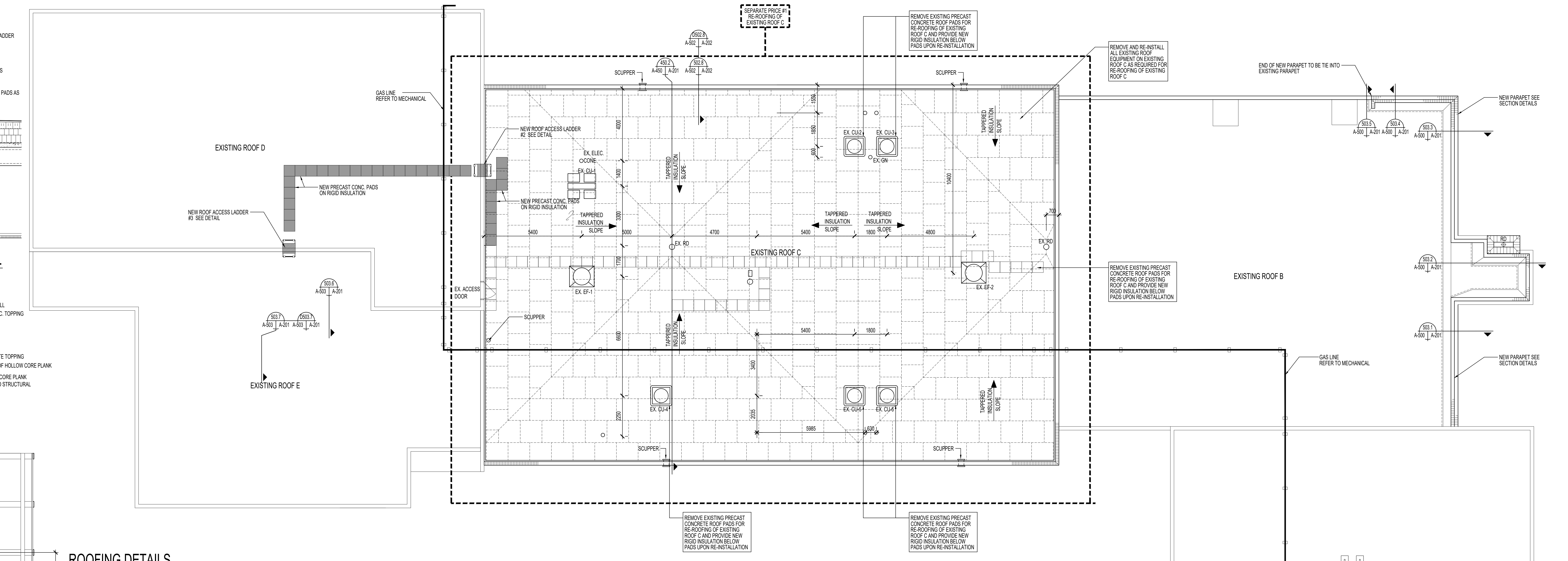
SEPARATE PRICE #1 RE-ROOFING OF EXISTING ROOF C
D502.8 A-502 A-202
450.2 A-450 A-201
502.8 A-502 A-202
SCUPPER
SCUPPER
REMOVE EXISTING PRECAST CONCRETE ROOF PADS FOR RE-ROOFING OF EXISTING ROOF C AND PROVIDE NEW RIGID INSULATION BELOW PADS UPON RE-INSTALLATION
REMOVE AND RE-INSTALL ALL EXISTING ROOF EQUIPMENT ON EXISTING ROOF C AS REQUIRED FOR RE-ROOFING OF EXISTING ROOF C
END OF NEW PARAPET TO BE TIE INTO EXISTING PARAPET
NEW PARAPET SEE SECTION DETAILS
503.5 A-500 A-201
503.4 A-500 A-201
503.3 A-500 A-201
GAS LINE REFER TO MECHANICAL
EXISTING ROOF D
NEW PRECAST CONC. PADS ON RIGID INSULATION
NEW ROOF ACCESS LADDER #3 SEE DETAIL
NEW ROOF ACCESS LADDER #2 SEE DETAIL
EX. ELEC. CONE
EX. CU-1
NEW PRECAST CONC. PADS ON RIGID INSULATION
TAPERED INSULATION SLOPE
EX. CU-2
EX. CU-3
EX. GN
4000
1400
3300
1700
6600
2250
1550
1850
600
10400
700
5400
5000
4700
5400
1800
4800
EX. RD
EX. RD
EXISTING ROOF C
EX. EF-1
EX. EF-2
EX. ACCESS DOOR
SCUPPER
REMOVE EXISTING PRECAST CONCRETE ROOF PADS FOR RE-ROOFING OF EXISTING ROOF C AND PROVIDE NEW RIGID INSULATION BELOW PADS UPON RE-INSTALLATION
EXISTING ROOF B
RD
503.2 A-500 A-201
503.1 A-500 A-201
NEW PARAPET SEE SECTION DETAILS
GAS LINE REFER TO MECHANICAL
503.6 A-503 A-201
503.7 A-503 A-201
D503.7 A-503 A-201
EXISTING ROOF E
5400
1800
3400
2035
5985
630
EX. CU-4
EX. CU-5
EX. CU-6
SCUPPER
SCUPPER
REMOVE EXISTING PRECAST CONCRETE ROOF PADS FOR RE-ROOFING OF EXISTING ROOF C AND PROVIDE NEW RIGID INSULATION BELOW PADS UPON RE-INSTALLATION
REMOVE EXISTING PRECAST CONCRETE ROOF PADS FOR RE-ROOFING OF EXISTING ROOF C AND PROVIDE NEW RIGID INSULATION BELOW PADS UPON RE-INSTALLATION

ROOFING DETAILS

SCALE: 1:10

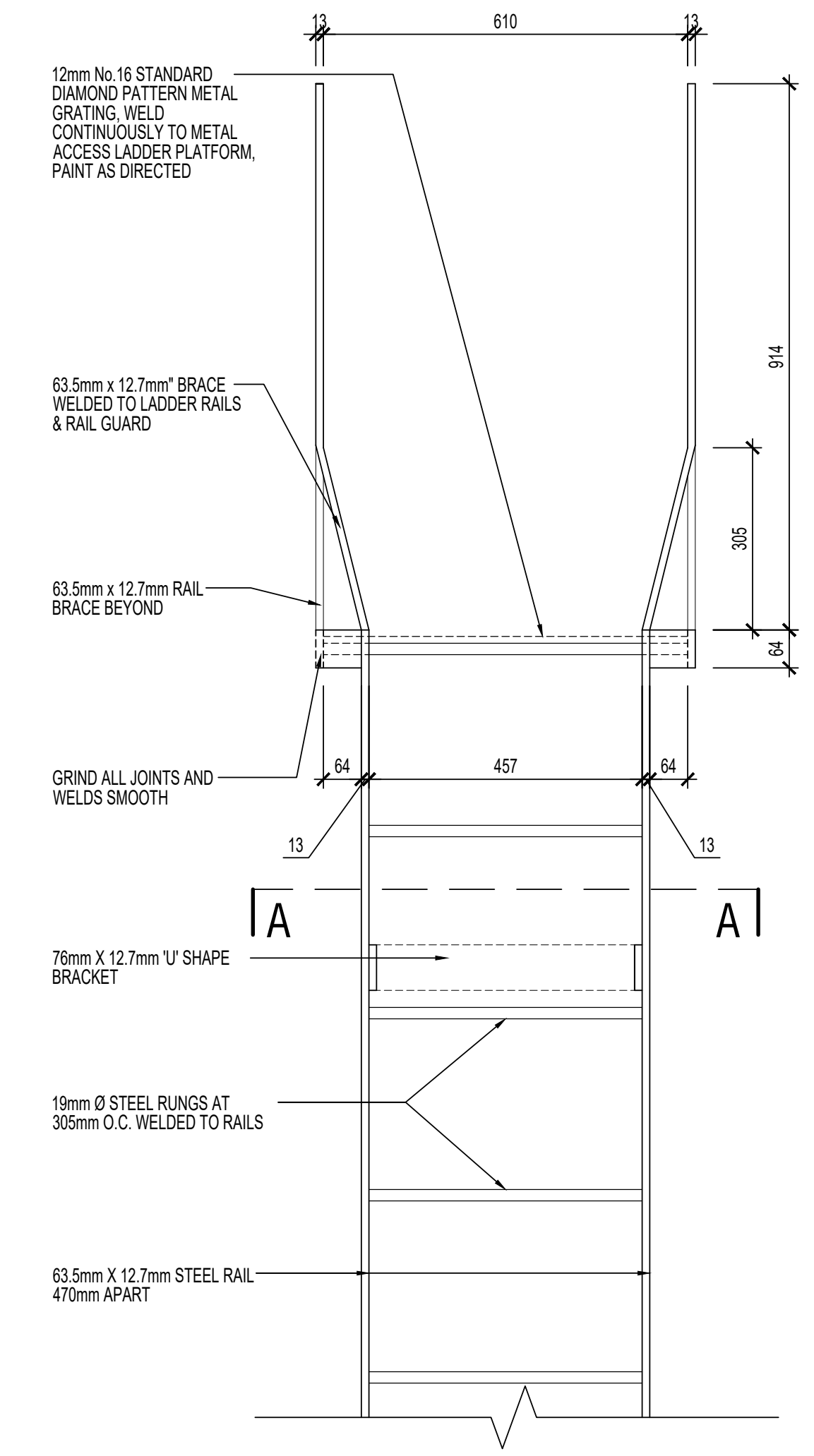
13
610
13
12mm No.16 STANDARD DIAMOND PATTERN METAL GRATING, WELD CONTINUOUSLY TO METAL ACCESS LADDER PLATFORM, PAINT AS DIRECTED
63.5mm x 12.7mm" BRACE WELDED TO LADDER RAILS & RAIL GUARD
63.5mm x 12.7mm RAIL BRACE BEYOND
GRIND ALL JOINTS AND WELDS SMOOTH
914
305
64
64
457
64
13
13
A
A
76mm X 12.7mm 'U' SHAPE BRACKET
19mm Ø STEEL RUNGS AT 305mm O.C. WELDED TO RAILS
63.5mm X 12.7mm STEEL RAIL 470mm APART

ROOF ACCESS LADDER TYP.

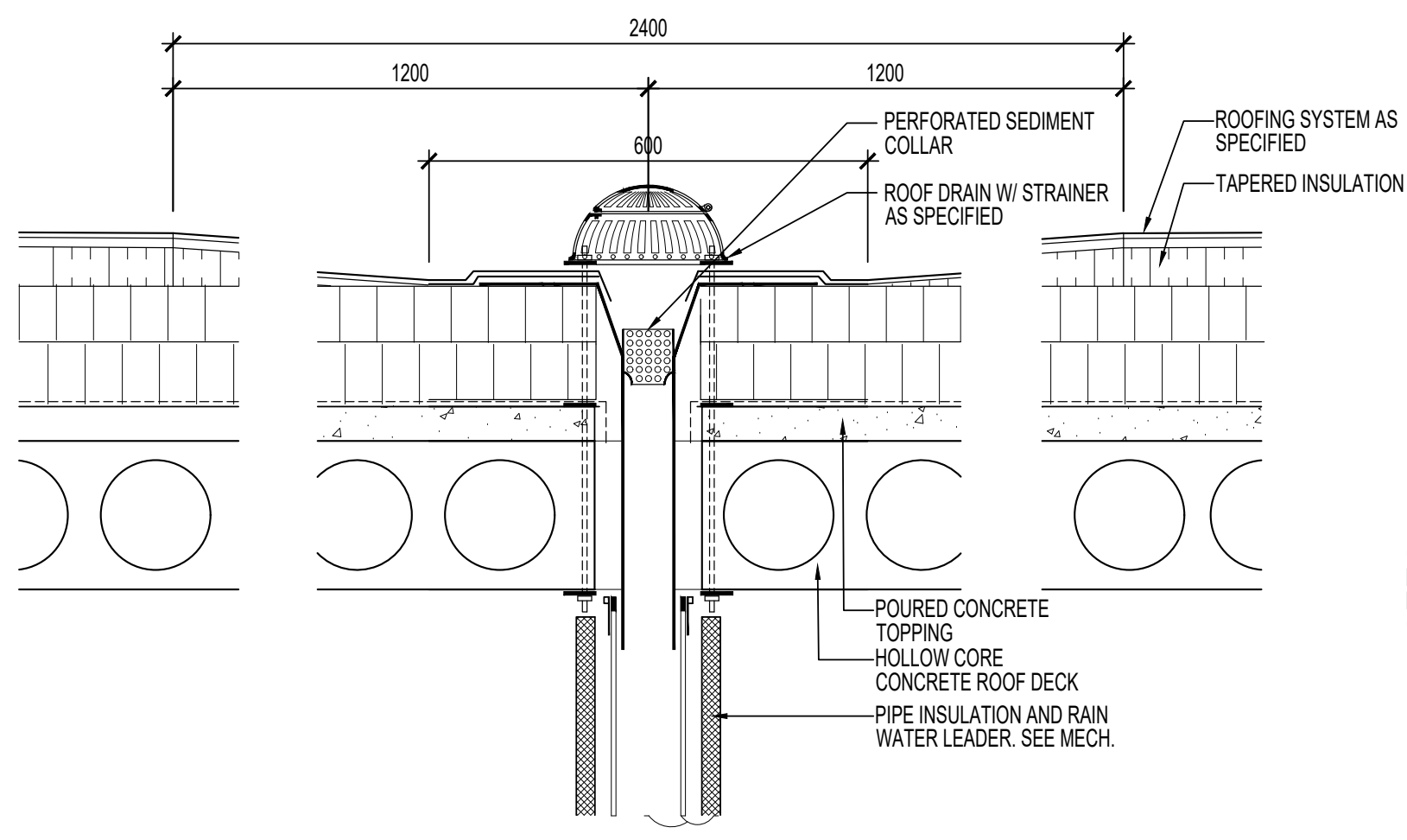
2400
1200
1200
600
PERFORATED SEDIMENT COLLAR
ROOF DRAIN W/ STRAINER AS SPECIFIED
ROOFING SYSTEM AS SPECIFIED
TAPERED INSULATION
POURED CONCRETE TOPPING
HOLLOW CORE CONCRETE ROOF DECK
PIPE INSULATION AND RAIN WATER LEADER. SEE MECH.

ROOF SUMP DETAIL

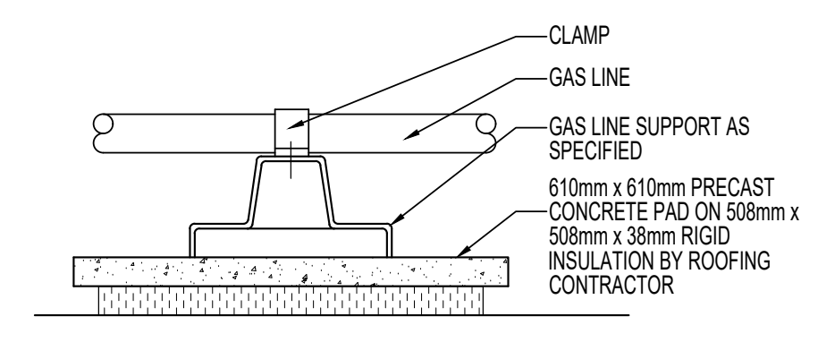
CLAMP
GAS LINE
GAS LINE SUPPORT AS SPECIFIED
610mm x 610mm PRECAST CONCRETE PAD ON 508mm x 508mm x 38mm RIGID INSULATION BY ROOFING CONTRACTOR

GAS LINE SUPPORT

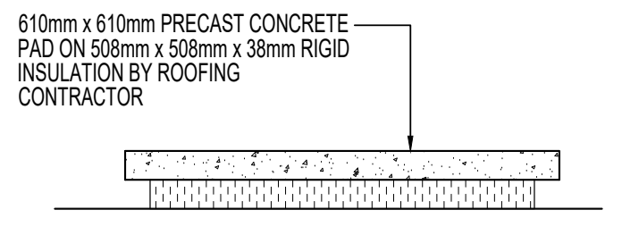
610mm x 610mm PRECAST CONCRETE PAD ON 508mm x 508mm x 38mm RIGID INSULATION BY ROOFING CONTRACTOR

PRECAST PAD DETAIL

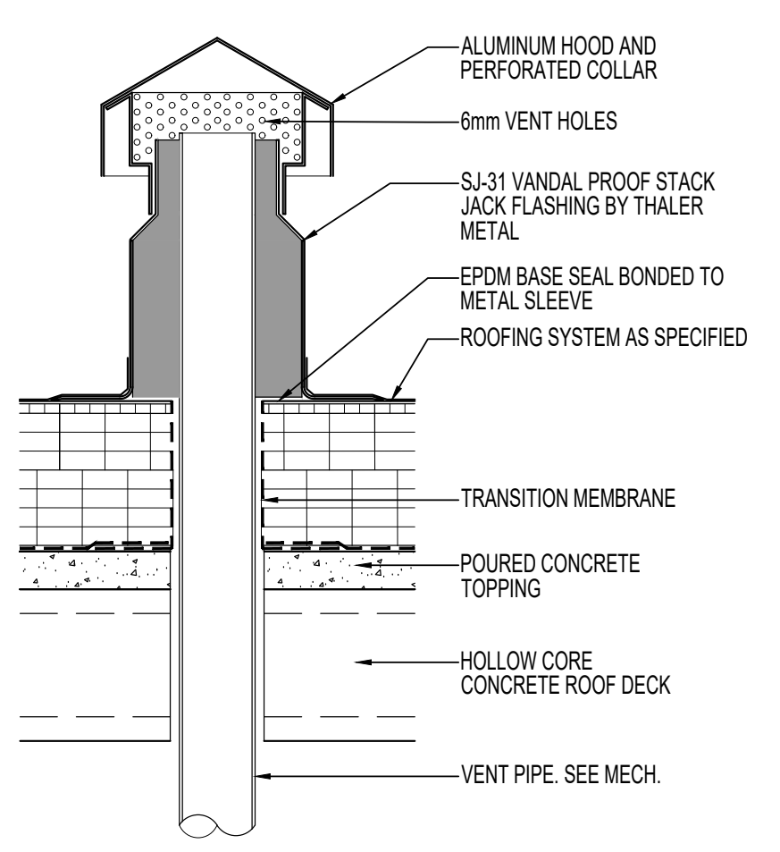
ALUMINUM HOOD AND PERFORATED COLLAR
6mm VENT HOLES
SJ-31 VANDAL PROOF STACK JACK FLASHING BY THALER METAL
EPDM BASE SEAL BONDED TO METAL SLEEVE
ROOFING SYSTEM AS SPECIFIED
TRANSITION MEMBRANE
POURED CONCRETE TOPPING
HOLLOW CORE CONCRETE ROOF DECK
VENT PIPE. SEE MECH.

VANDAL PROOF STACK JACK FLASHING

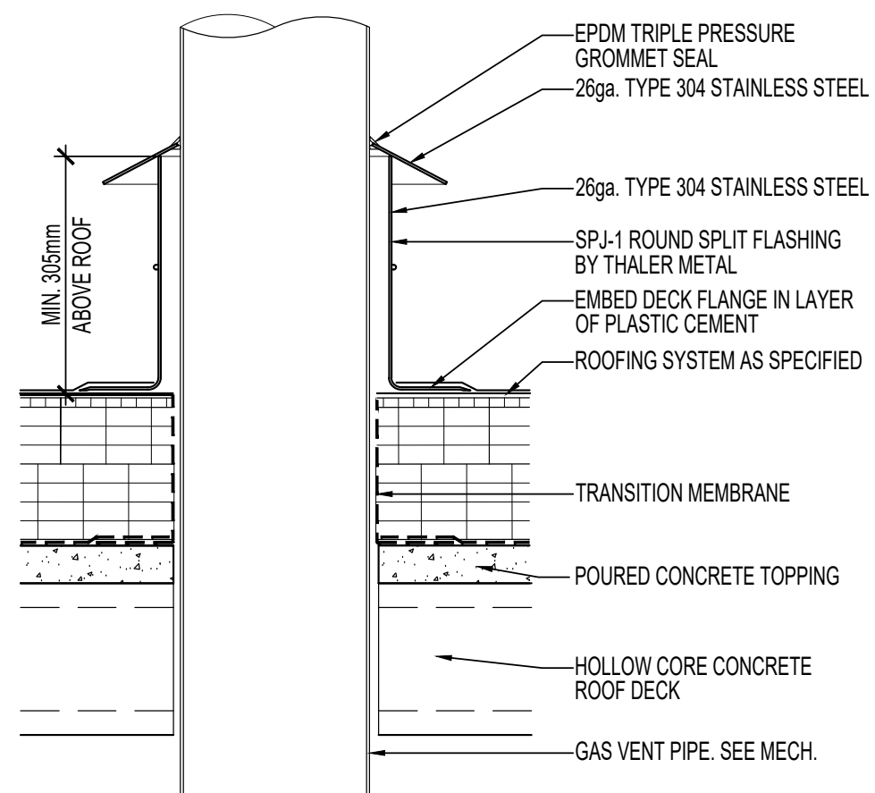
EPDM TRIPLE PRESSURE GROMMET SEAL
26ga. TYPE 304 STAINLESS STEEL CAP
26ga. TYPE 304 STAINLESS STEEL SLEEVE
SPJ-1 ROUND SPLIT FLASHING BY THALER METAL
EMBED DECK FLANGE IN LAYER OF PLASTIC CEMENT
ROOFING SYSTEM AS SPECIFIED
MIN. 305mm ABOVE ROOF
TRANSITION MEMBRANE
POURED CONCRETE TOPPING
HOLLOW CORE CONCRETE ROOF DECK
GAS VENT PIPE. SEE MECH.

GAS VENT FLASHING

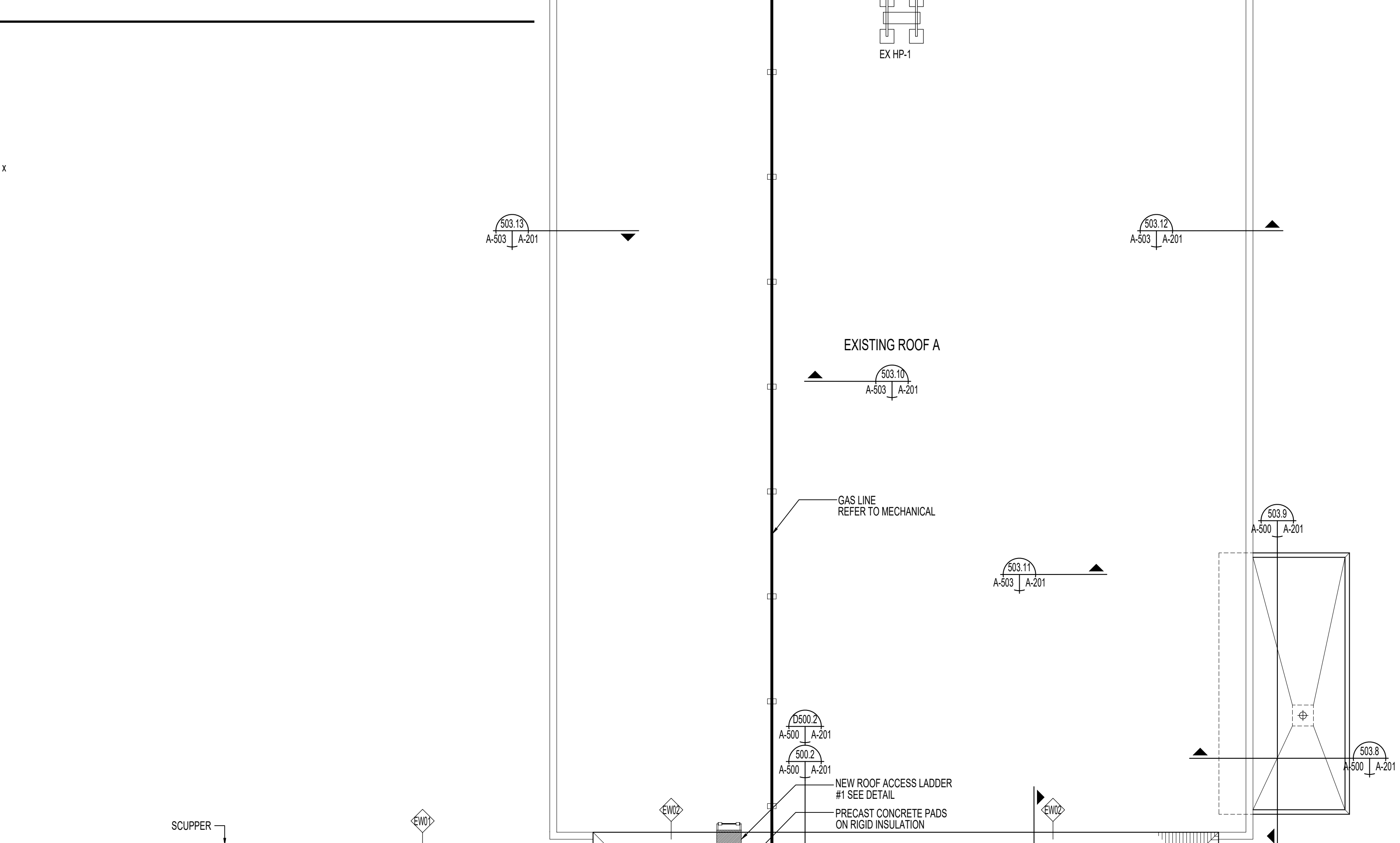
EX HP-1
EXISTING ROOF A
GAS LINE REFER TO MECHANICAL
GAS LINE REFER TO MECHANICAL
503.8 A-500 A-201
D500.2 A-500 A-201
500.2 A-500 A-201
NEW ROOF ACCESS LADDER #1 SEE DETAIL
PRECAST CONCRETE PADS ON RIGID INSULATION

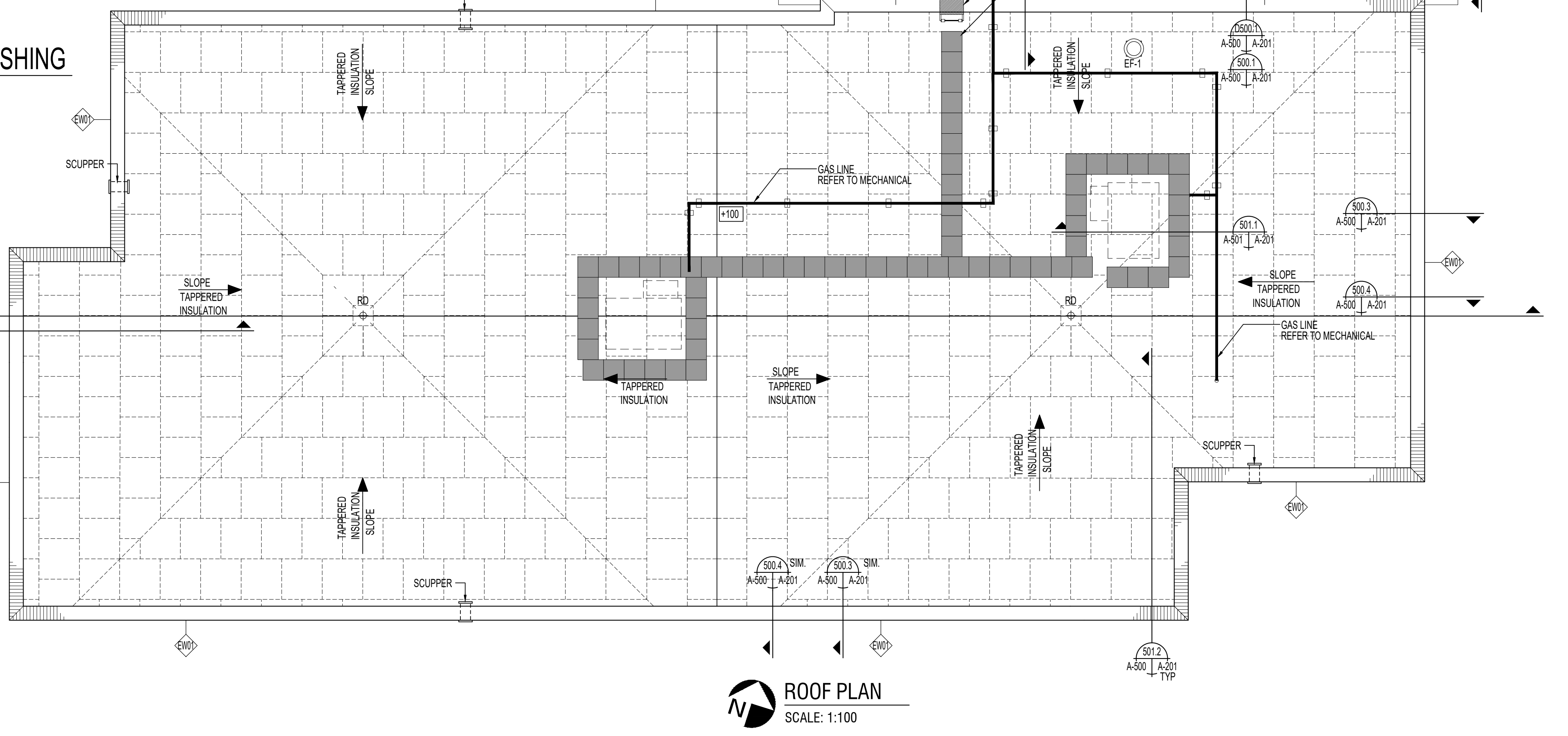
SCUPPER
EW01
EW02
EW02
SCUPPER
EW01
D500.1 A-500 A-201
500.1 A-500 A-201
EF-1
TAPERED INSULATION SLOPE
GAS LINE REFER TO MECHANICAL
+100
501.1 A-501 A-201
500.3 A-500 A-201
500.4 A-500 A-201
SLOPE TAPERED INSULATION
RD
RD
502.1 A-500 A-201 TYP
450.1 A-450 A-201
TAPERED INSULATION
SLOPE TAPERED INSULATION
GAS LINE REFER TO MECHANICAL
SCUPPER
EW01
500.4 A-500 A-201 SIM.
500.3 A-500 A-201 SIM.
SCUPPER
EW01
EW01
501.2 A-500 A-201 TYP
N

ROOF PLAN

SCALE: 1:100

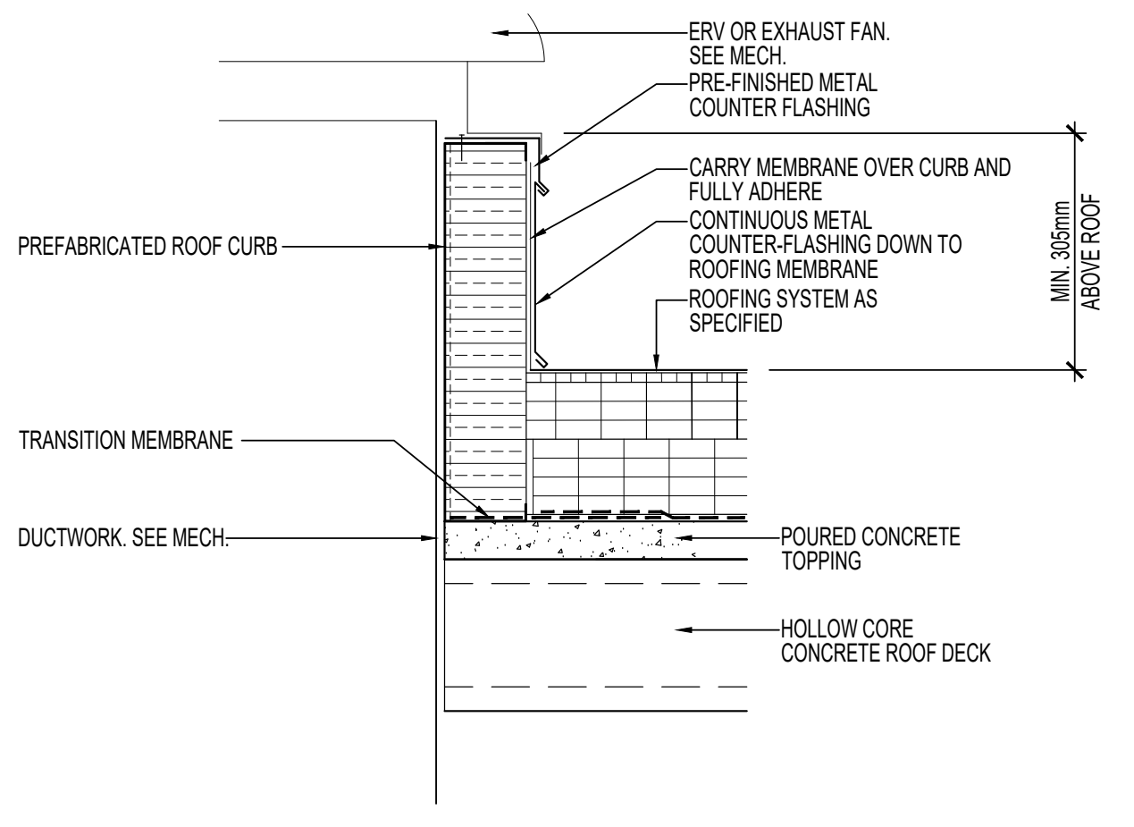
ERV OR EXHAUST FAN. SEE MECH.
PRE-FINISHED METAL COUNTER FLASHING
CARRY MEMBRANE OVER CURB AND FULLY ADHERE
CONTINUOUS METAL COUNTER-FLASHING DOWN TO ROOFING MEMBRANE
ROOFING SYSTEM AS SPECIFIED
MIN. 305mm ABOVE ROOF
PREFABRICATED ROOF CURB
TRANSITION MEMBRANE
DUCTWORK. SEE MECH.
POURED CONCRETE TOPPING
HOLLOW CORE CONCRETE ROOF DECK

ERV / EXHAUST FAN CURB DETAIL

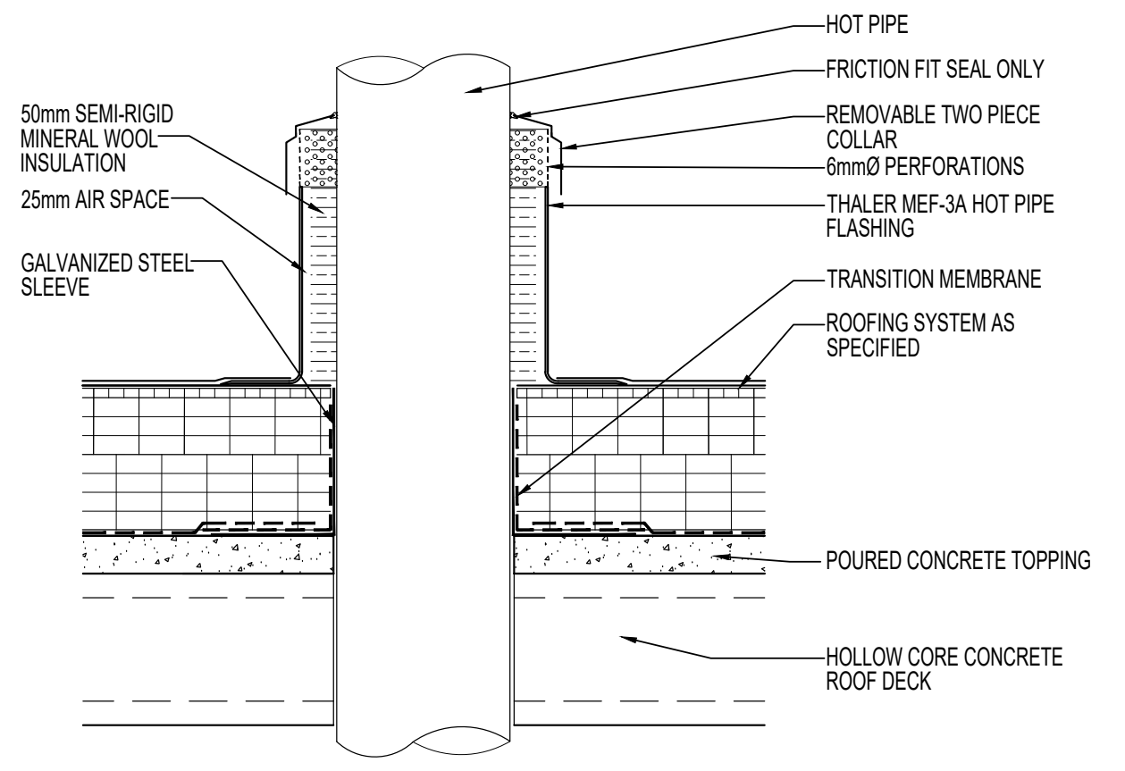
HOT PIPE
FRICTION FIT SEAL ONLY
REMOVABLE TWO PIECE COLLAR
6mmØ PERFORATIONS
THALER MEF-3A HOT PIPE FLASHING
50mm SEMI-RIGID MINERAL WOOL INSULATION
25mm AIR SPACE
GALVANIZED STEEL SLEEVE
TRANSITION MEMBRANE
ROOFING SYSTEM AS SPECIFIED
POURED CONCRETE TOPPING
HOLLOW CORE CONCRETE ROOF DECK

HOT PIPE FLASHING

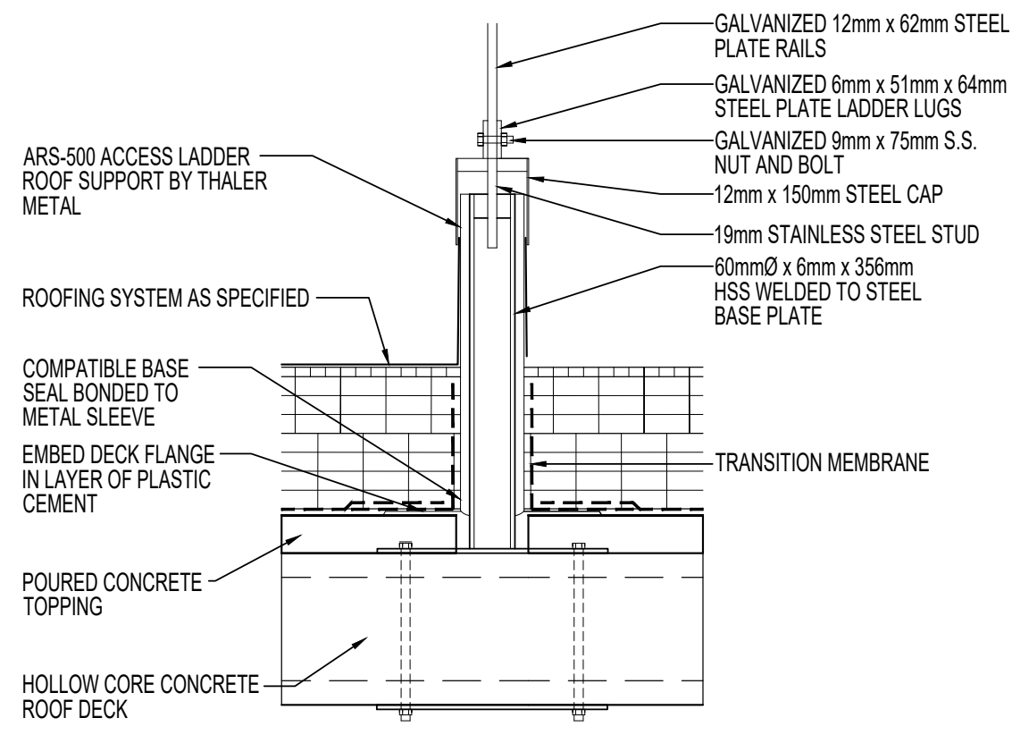
GALVANIZED 12mm x 62mm STEEL PLATE RAILS
GALVANIZED 6mm x 51mm x 64mm STEEL PLATE LADDER LUGS
GALVANIZED 9mm x 75mm S.S. NUT AND BOLT
12mm x 150mm STEEL CAP
19mm STAINLESS STEEL STUD
60mmØ x 6mm x 356mm HSS WELDED TO STEEL BASE PLATE
ARS-500 ACCESS LADDER ROOF SUPPORT BY THALER METAL
ROOFING SYSTEM AS SPECIFIED
COMPATIBLE BASE SEAL BONDED TO METAL SLEEVE
EMBED DECK FLANGE IN LAYER OF PLASTIC CEMENT
TRANSITION MEMBRANE
POURED CONCRETE TOPPING
HOLLOW CORE CONCRETE ROOF DECK

ROOF ACCESS LADDER SUPPORT

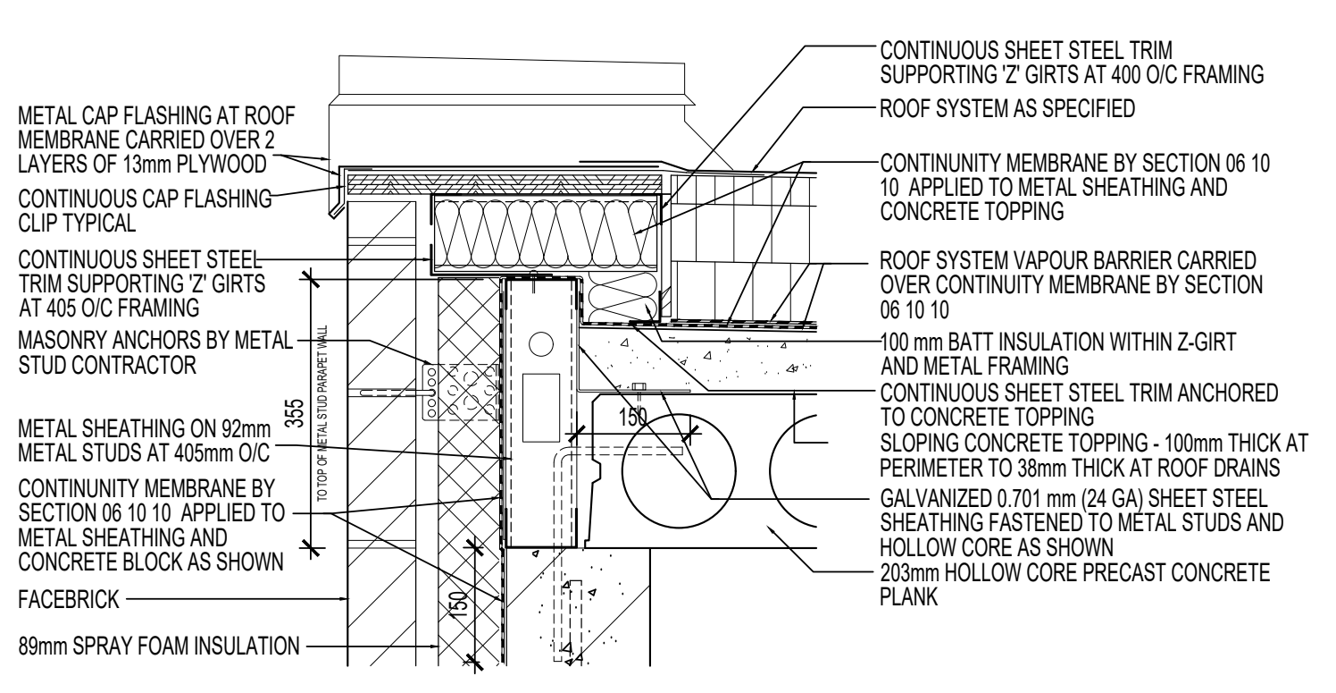
METAL CAP FLASHING AT ROOF MEMBRANE CARRIED OVER 2 LAYERS OF 13mm PLYWOOD
CONTINUOUS CAP FLASHING CLIP TYPICAL
CONTINUOUS SHEET STEEL TRIM SUPPORTING 'Z' GIRTS AT 405 O/C FRAMING
MASONRY ANCHORS BY METAL STUD CONTRACTOR
METAL SHEATHING ON 92mm METAL STUDS AT 405mm O/C
CONTINUNITY MEMBRANE BY SECTION 06 10 10 APPLIED TO METAL SHEATHING AND CONCRETE BLOCK AS SHOWN
FACEBRICK
89mm SPRAY FOAM INSULATION
355
150
150
CONTINUOUS SHEET STEEL TRIM SUPPORTING 'Z' GIRTS AT 400 O/C FRAMING
ROOF SYSTEM AS SPECIFIED
CONTINUNITY MEMBRANE BY SECTION 06 10 10 APPLIED TO METAL SHEATHING AND CONCRETE TOPPING
ROOF SYSTEM VAPOUR BARRIER CARRIED OVER CONTINUITY MEMBRANE BY SECTION 06 10 10
100 mm BATT INSULATION WITHIN Z-GIRT AND METAL FRAMING
CONTINUOUS SHEET STEEL TRIM ANCHORED TO CONCRETE TOPPING
SLOPING CONCRETE TOPPING - 100mm THICK AT PERIMETER TO 38mm THICK AT ROOF DRAINS
GALVANIZED 0.701 mm (24 GA) SHEET STEEL SHEATHING FASTENED TO METAL STUDS AND HOLLOW CORE AS SHOWN
203mm HOLLOW CORE PRECAST CONCRETE PLANK

TYPICAL SCUPPER DETAIL

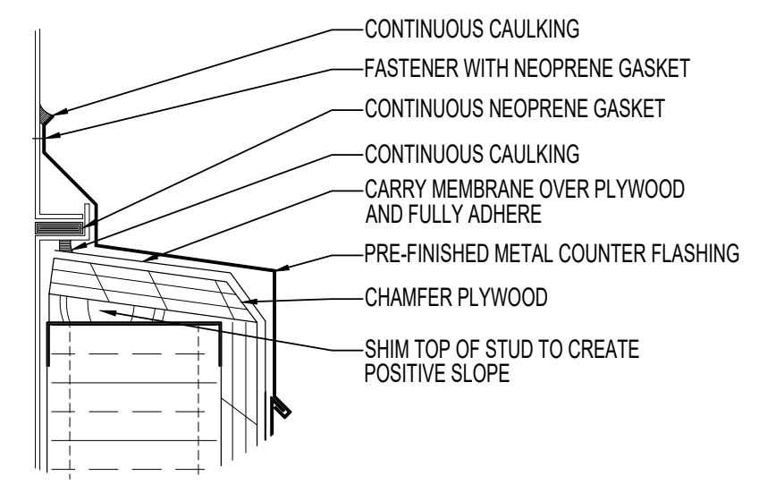
CONTINUOUS CAULKING
FASTENER WITH NEOPRENE GASKET
CONTINUOUS NEOPRENE GASKET
CONTINUOUS CAULKING
CARRY MEMBRANE OVER PLYWOOD AND FULLY ADHERE
PRE-FINISHED METAL COUNTER FLASHING
CHAMFER PLYWOOD
SHIM TOP OF STUD TO CREATE POSITIVE SLOPE

BLOW-UP DETAIL

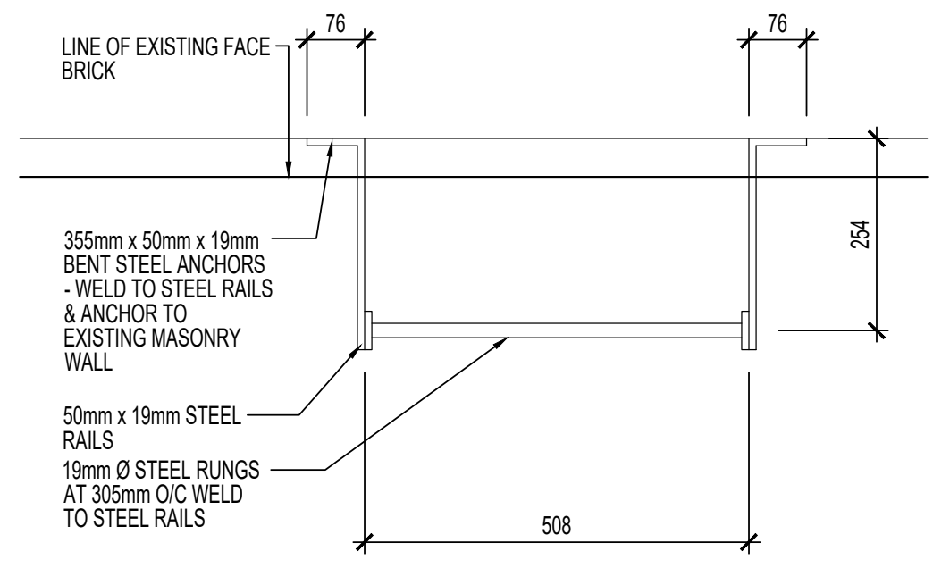
LINE OF EXISTING FACE BRICK
76
76
254
355mm x 50mm x 19mm BENT STEEL ANCHORS - WELD TO STEEL RAILS & ANCHOR TO EXISTING MASONRY WALL
50mm x 19mm STEEL RAILS
19mm Ø STEEL RUNGS AT 305mm O/C WELD TO STEEL RAILS
508

ROOF ACCESS LADDER SECTION A

ROOFING LEGEND

⊠	NEW 2400mm x 2400mm ROOF DRAIN LOCATION
▨	NEW ROOF ACCESS LADDERS - STEEL PLATE
◎	NEW EXHAUST FAN
▭	NEW GAS LINE/CONDUIT SUPPORTS. CONTRACTOR TO VERIFY LENGTHS AND PROVIDE SUPPORTS AS REQUIRED
■	NEW PRECAST CONCRETE TRAFFIC PAD ON 38mm RIGID INSULATION
□	EXISTING PRECAST CONCRETE TRAFFIC PAD ON 38mm RIGID INSULATION

MUNICIPAL APPROVAL STAMP

jptA

jp thomson architects ltd
2001 Provincial Rd, Unit 6A,
Windsor, Ontario, N8W 5V7
www.jpthomson.com
t 519-256-3131

SEAL:

CONSULTANT:

CONSULTANT SEAL:

DRAWING INFO:

A DETAIL NO.
B LOCATION SHEET
C DETAILED ON

COPYRIGHT:

ISSUANCES:

No.	Issued for/Description	Date
1	80% OWNER REVIEW	2025-08-12
2	PERMIT	2025-11-28
3	SITE PLAN CONTROL	2026-02-11
4	PERMIT	2026-03-02
5	TENDER	2026-04-09
6	PERMIT	2026-04-28
7	ADDENDUM 3	2026-05-15

CLIENT:

Waterloo Catholic District School Board
480 Dutton Drive,
Waterloo, ON N2L 4C6

PROJECT TITLE:

St. Gregory Catholic Elementary School Addition and Renovations

34 Osborne St.
Cambridge, ON
N1S 3H1

DRAWING TITLE:

ROOF PLANS AND DETAILS

DATE: 2026-03-02
DRAWN BY: CM
SCALE: AS SHOWN
PROJECT NO: **25-106**
DRAWING NO: **A-202**

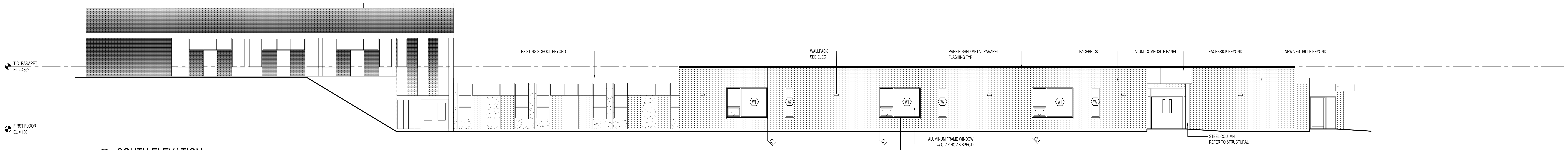
T.O. PARAPET
EL.= 4352
FIRST FLOOR
EL.= 100
EXISTING SCHOOL BEYOND
WALLPACK
SEE ELEC
PREFINISHED METAL PARAPET
FLASHING TYP
FACEBRICK
ALUM. COMPOSITE PANEL
FACEBRICK BEYOND
NEW VESTIBULE BEYOND
W1
W2
CJ
ALUMINUM FRAME WINDOW
w/ GLAZING AS SPEC'D
PRECAST CONCRETE SILL, TYP.
STEEL COLUMN
REFER TO STRUCTURAL

1
A-400
SOUTH ELEVATION
SCALE: 1:100

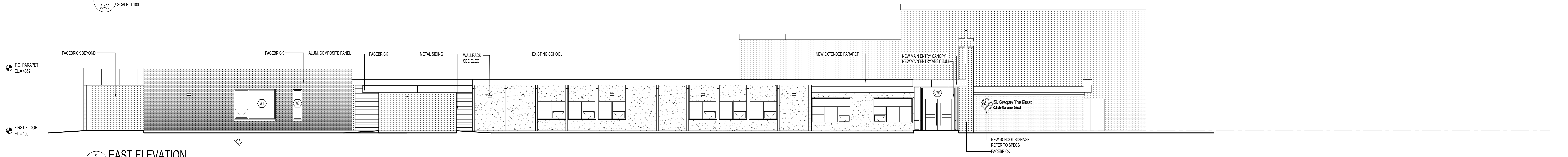
T.O. PARAPET
EL.= 4352
FIRST FLOOR
EL.= 100
FACEBRICK BEYOND
FACEBRICK
ALUM. COMPOSITE PANEL
FACEBRICK
METAL SIDING
WALLPACK
SEE ELEC
EXISTING SCHOOL
NEW EXTENDED PARAPET
NEW MAIN ENTRY CANOPY
NEW MAIN ENTRY VESTIBULE
W1
W2
CW1
CJ
St. Gregory The Great
Catholic Elementary School
NEW SCHOOL SIGNAGE
REFER TO SPECS
FACEBRICK

2
A-400
EAST ELEVATION
SCALE: 1:100

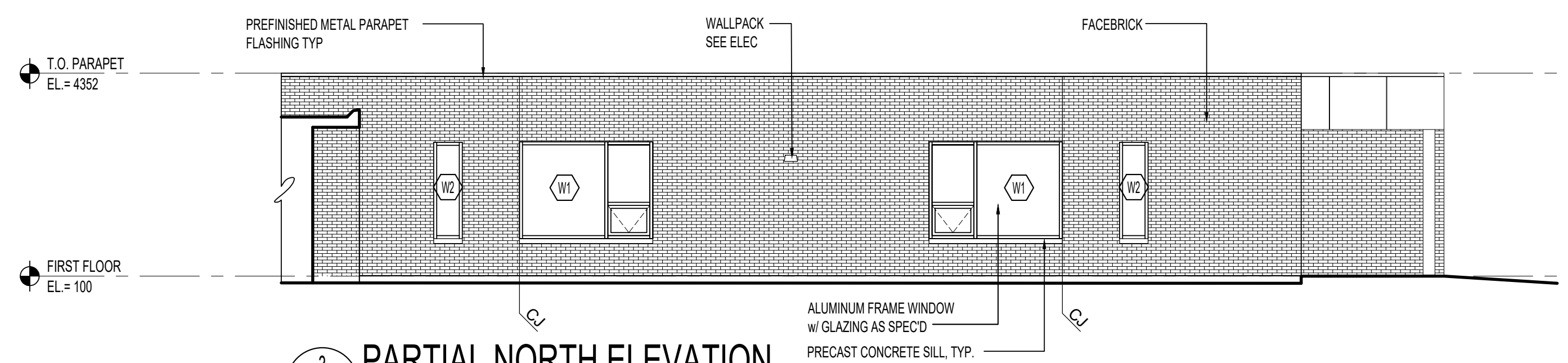
T.O. PARAPET
EL.= 4352
FIRST FLOOR
EL.= 100
PREFINISHED METAL PARAPET
FLASHING TYP
WALLPACK
SEE ELEC
FACEBRICK
W2
W1
W1
W2
CJ
ALUMINUM FRAME WINDOW
w/ GLAZING AS SPEC'D
PRECAST CONCRETE SILL, TYP.
CJ

3
A-400
PARTIAL NORTH ELEVATION
SCALE: 1:100

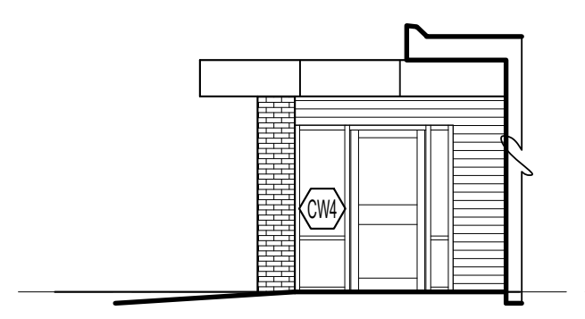

4
A-400
PARTIAL NORTH ELEVATION
SCALE: 1:100

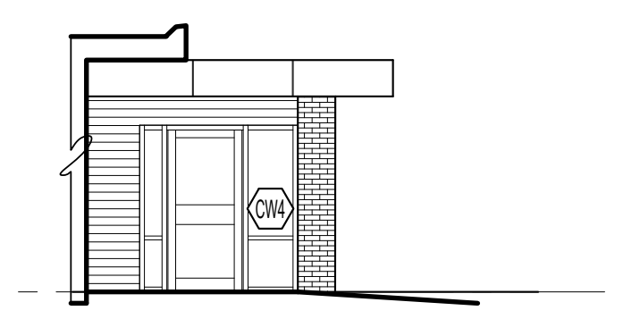

5
A-400
PARTIAL SOUTH ELEVATION
SCALE: 1:100

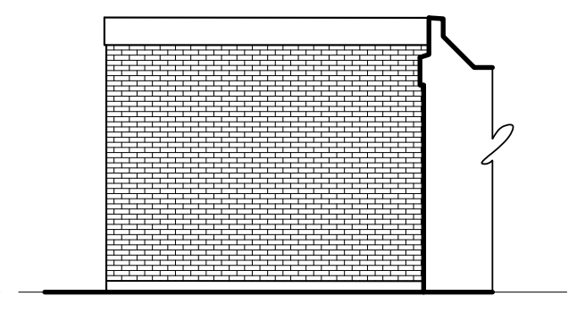

6
A-400
PARTIAL NORTH ELEVATION
SCALE: 1:100

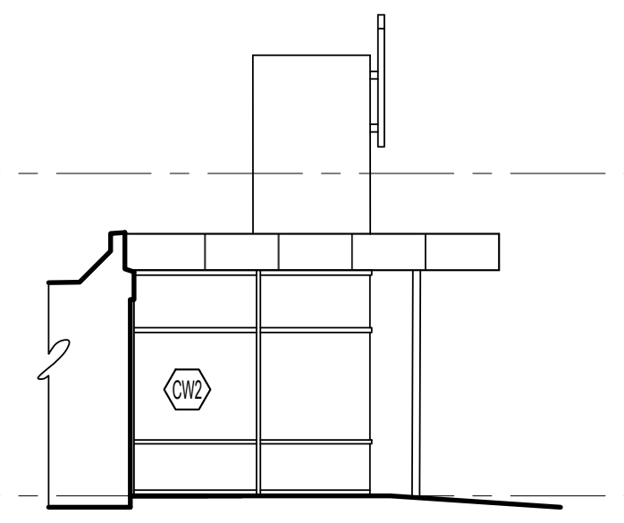

7
A-400
PARTIAL SOUTH ELEVATION
SCALE: 1:100

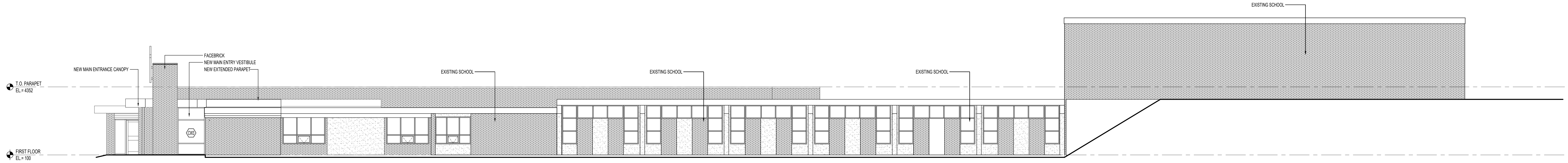
EXISTING SCHOOL
NEW MAIN ENTRANCE CANOPY
FACEBRICK
NEW MAIN ENTRY VESTIBULE
NEW EXTENDED PARAPET
EXISTING SCHOOL
EXISTING SCHOOL
EXISTING SCHOOL
T.O. PARAPET
EL.= 4352
FIRST FLOOR
EL.= 100
CW3

8
A-400
NORTH ELEVATION
SCALE: 1:100

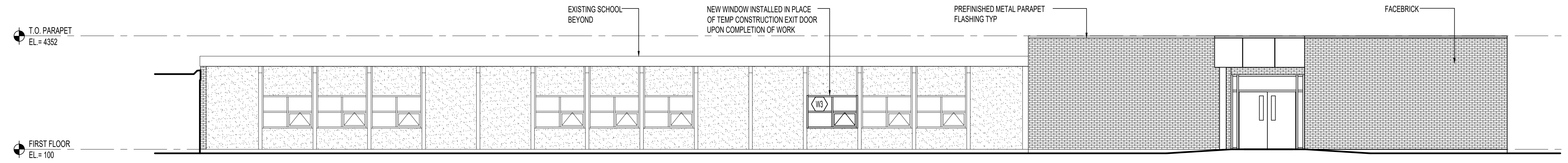
T.O. PARAPET
EL.= 4352
FIRST FLOOR
EL.= 100
EXISTING SCHOOL
BEYOND
NEW WINDOW INSTALLED IN PLACE
OF TEMP CONSTRUCTION EXIT DOOR
UPON COMPLETION OF WORK
PREFINISHED METAL PARAPET
FLASHING TYP
FACEBRICK
W3

9
A-400
PARTIAL WEST ELEVATION
SCALE: 1:100

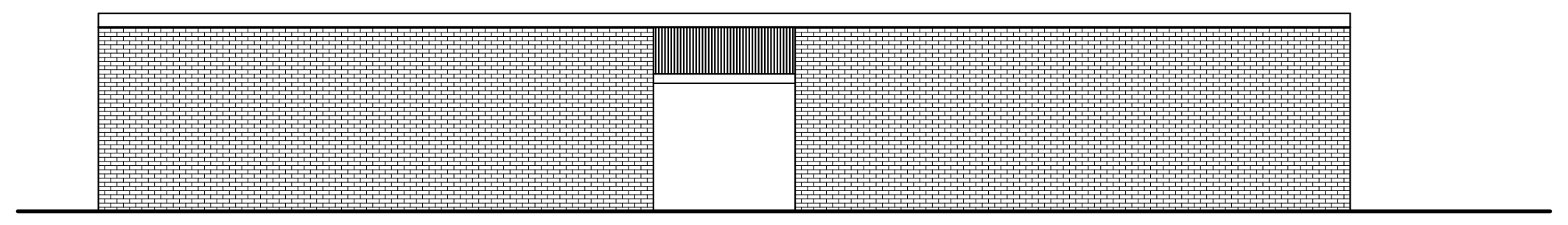

10
A-400
EXISTING SOUTH ELEVATION

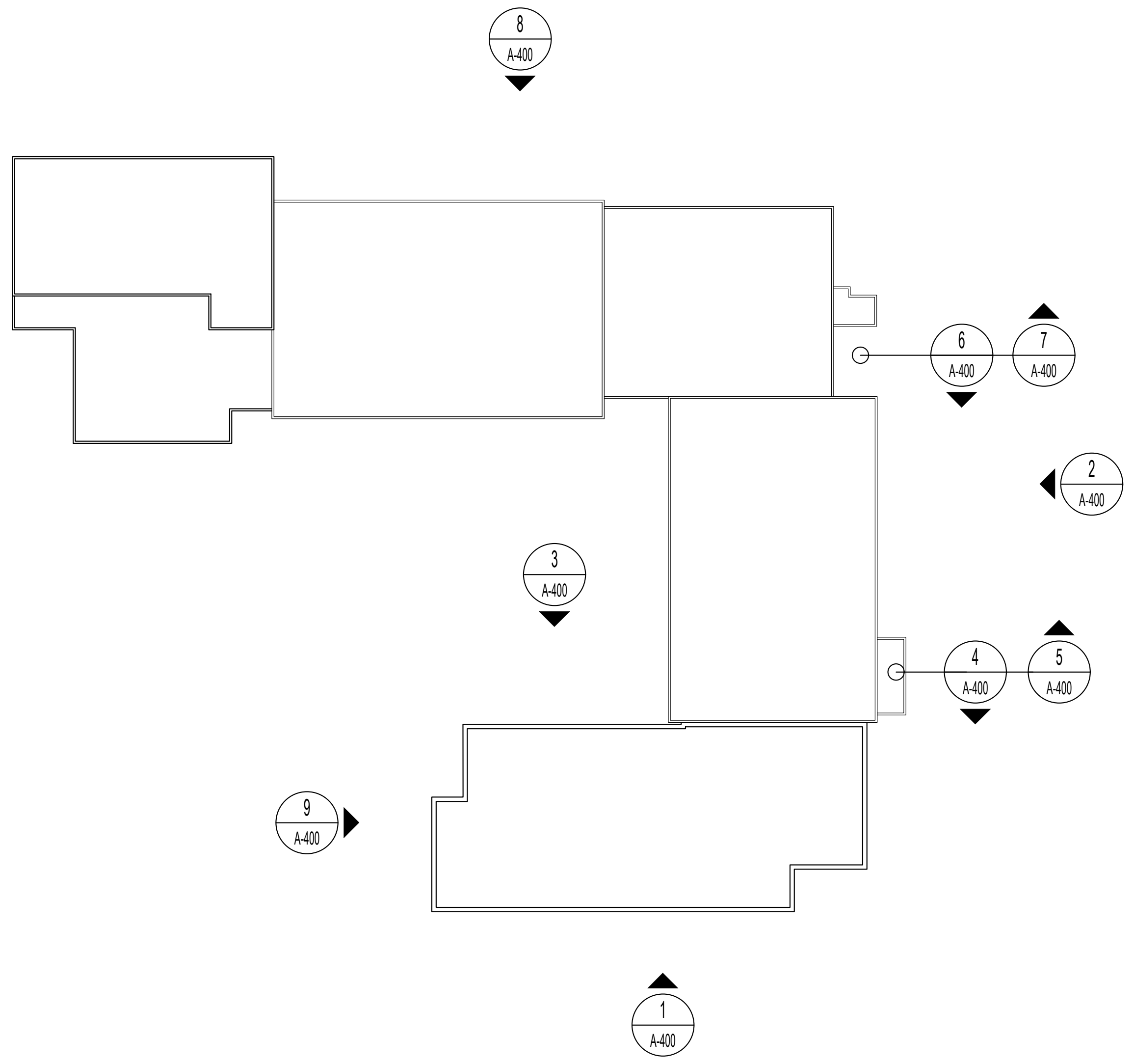
8
A-400
6
A-400
7
A-400
2
A-400
3
A-400
4
A-400
5
A-400
9
A-400
1
A-400

WINDOW ELEVATIONS
SCALE: 1:40

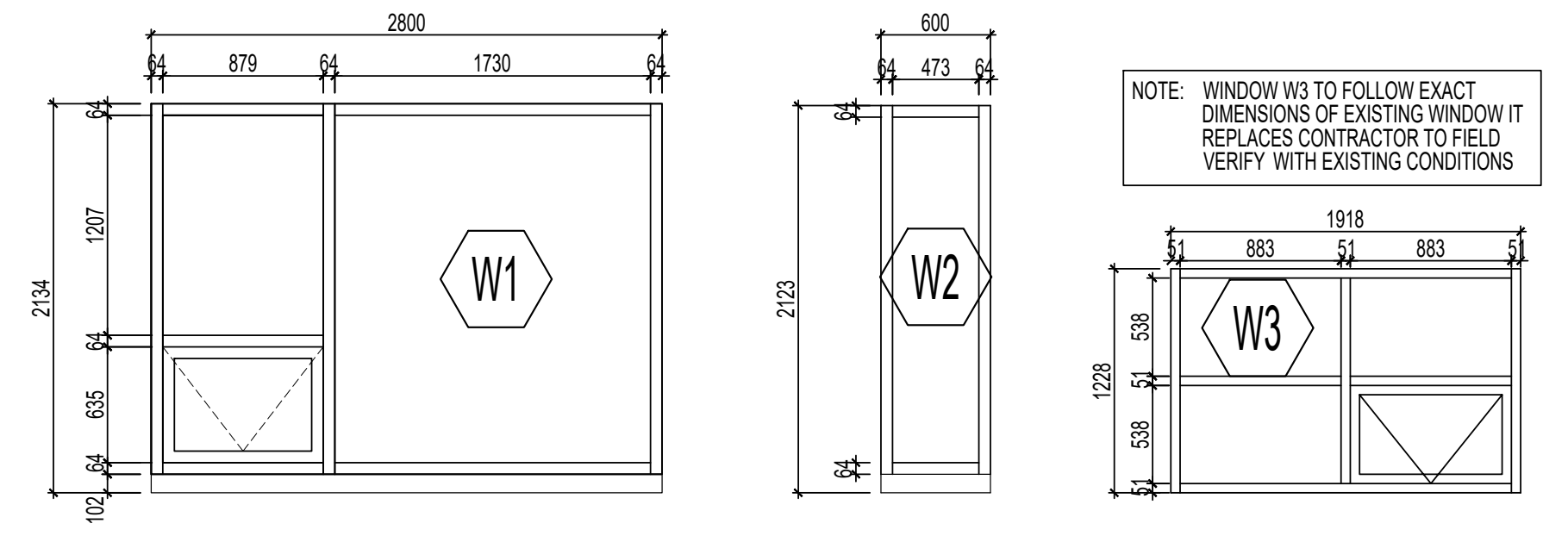
2800
64
879
64
1730
64
2134
64
1207
64
635
64
102
W1
600
64
473
64
2123
64
64
W2
1918
51
883
51
883
51
1228
538
51
538
51
W3

NOTE: WINDOW W3 TO FOLLOW EXACT DIMENSIONS OF EXISTING WINDOW IT REPLACES CONTRACTOR TO FIELD VERIFY WITH EXISTING CONDITIONS

NOTES & LEGEND

1. ALL GLAZING TO BE TYPE GL-1 UNLESS NOTED OTHERWISE. REFER TO SPECIFICATION FOR GLAZING TYPES.
2. GENERAL CONTRACTOR TO FIELD VERIFY ALL OPENINGS AND CONDITIONS PRIOR TO COMMENCEMENT OF ANY WORK.
3. FRAME DIMENSIONS SHOWN ARE NOMINAL. SHIM SPACE REQUIRED AND TO BE COORDINATED WITH FIELD DIMENSIONS.
4. ALL EXPOSED LINTELS TO BE PAINTED.
5. DIMENSIONS SHOWN ON THESE ELEVATIONS ARE APPROXIMATE - REFER TO PLANS AND SECTIONS

⊠ OPERABLE WINDOW LOCATION

⏢ WALL PACK MOUNTED REFER TO ELECTRICAL

MUNICIPAL APPROVAL STAMP

jp thomson architects ltd
2001 Provincial Rd, Unit 6A,
Windsor, Ontario, N8W 5V7
www.jpthomson.com
t 519-256-3131

SEAL:

CONSULTANT:

CONSULTANT SEAL:

DRAWING INFO:
A DETAIL NO.
B LOCATION SHEET
C DETAILED ON

COPYRIGHT:

Any discrepencies must be reported to the Architect immediately. Do not scale these drawings.

ISSUANCES:

No.	Issued for/Description	Date
1	80% OWNER REVIEW	2025-08-12
2	85% COSTING	2025-09-05
3	PERMIT	2025-11-28
4	SITE PLAN CONTROL	2026-02-11
5	PERMIT	2026-03-02
6	SITE PLAN CONTROL	2026-03-16
7	TENDER	2026-04-09
8	PERMIT	2026-04-28
9	ADDENDUM 3	2026-05-19

CLIENT:
Waterloo Catholic District School Board
480 Dutton Drive,
Waterloo, ON N2L 4C6

PROJECT TITLE:
St. Gregory Catholic Elementary School Addition and Renovations

34 Osborne St.
Cambridge, ON
N1S 3H1

DRAWING TITLE:
EXTERIOR ELEVATIONS AND WINDOW DETAILS

DATE: 2026-03-02
DRAWN BY: ND
SCALE: AS SHOWN
PROJECT NO: **25-106**
DRAWING NO: **A-400**

GENERAL NOTES

1. GENERAL
    - a) THE ONTARIO BUILDING CODE, 2024, SHALL BE THE BASIS FOR THE DESIGN AND CONSTRUCTION.
    - b) ALL DIMENSIONS ON THE STRUCTURAL AND ARCHITECTURAL DRAWINGS MUST BE CHECKED AGAINST EACH OTHER AND EXISTING CONDITIONS, ANY INCONSISTENCIES MUST BE REPORTED TO THE ENGINEER BEFORE PROCEEDING WITH THE WORK. ALL DIMENSIONS AND ELEVATIONS ARE IN MILLIMETERS.
    - c) SHOULD ANY OF THE DETAILED INSTRUCTIONS SHOWN ON THESE PLANS CONFLICT WITH THESE GENERAL NOTES, THE SPECIFICATIONS, OR WITH EACH OTHER, THE STRICTEST PROVISION SHALL GOVERN. ALL APPLICABLE STANDARDS SHALL BE GOVERNED BY THE LATEST EDITION & AMENDED ITEMS.
    - d) IT IS SOLELY THE RESPONSIBILITY OF EACH CONTRACTOR TO FOLLOW ALL APPLICABLE SAFETY CODES AND REGULATIONS DURING ALL PHASES OF CONSTRUCTION. THE ENGINEER IS NOT ENGAGED IN, AND DOES NOT SUPERVISE CONSTRUCTION.
    - e) THE STRUCTURE IS DESIGNED TO BE SELF-SUPPORTING AND STABLE AFTER THE BUILDING IS FULLY COMPLETED. IT IS SOLELY THE CONTRACTOR'S RESPONSIBILITY TO DETERMINE ERECTION PROCEDURES AND SEQUENCE, AND TO ENSURE THE STABILITY OF THE BUILDING AND IT'S COMPONENTS, AND THE ADEQUACY OF TEMPORARY OR INCOMPLETE CONNECTIONS, DURING ERECTION. THIS INCLUDES THE ADDITION OF ANY SHORING, SHEETING, TEMPORARY GUYS, BRACING OR TIEDOWNS THAT MIGHT BE NECESSARY. IF APPLIED, THEY SHALL BE REMOVED AS CONDITIONS PERMIT, AND SHALL REMAIN THE CONTRACTORS PROPERTY. FOUNDATION WALLS ARE TO BE BE BRACED UNTIL SUPPORTED SLABS ABOVE ARE POURED AND CONSTRUCTION SUITS THE FINAL CONDITION. THE ENGINEER TAKES NO RESPONSIBILITY FOR, CONSTRUCTION MEANS AND METHODS OR JOB SITE SAFETY DURING CONSTRUCTION. PROCESSING AND/OR REVIEWING SUBMITTALS MADE BY THE CONTRACTOR WHICH MAY CONTAIN INFORMATION RELATED TO CONSTRUCTION METHODS OR SAFETY ISSUES, OR PARTICIPATION IN MEETINGS WHERE SUCH ISSUES MAY BE DISCUSSED, SHALL NOT BE CONSTRUED AS AN ASSUMPTION BY THE ENGINEER OF ANY RESPONSIBILITY FOR SAFETY PROCEDURES.
    - f) EQUIPMENT LOADS, OPENINGS AND STRUCTURE IN ANY WAY RELATED TO MECHANICAL AND ELECTRICAL REQUIREMENTS ARE SHOWN FOR BIDDING PURPOSES ONLY. THE CONTRACTOR SHALL COORDINATE THIS INFORMATION WITH THE INVOLVED TRADES BEFORE PROCEEDING WITH SUCH PORTION OF THE WORK. EXTRA COSTS RELATED TO VARIATION IN THESE REQUIREMENTS TO BE BORNE BY THE APPROPRIATE CONTRACTOR. THE CONTRACTOR SHALL PROVIDE ENGINEERING FOR LIFTS ETC TO BE SUPPORTED DURING CONSTRUCTION BASED ON THE SPECIFIED DESIGN LOADS ON THE DRAWINGS.

2. REVIEW OF CONSTRUCTION

THE GENERAL CONTRACTOR SHALL ASSUME COMPLETE RESPONSIBILITY FOR FULL SUPERVISION OF CONSTRUCTION WORK. SITE VISITS AND REVIEW BY ALEO ASSOCIATES INC. ARE INTENDED FOR THE SOLE PURPOSE OF ASCERTAINING CONFORMANCE WITH GENERAL DESIGN CONCEPT AND THE GENERAL REVIEW AS REQUIRED BY THE ONTARIO BUILDING CODE. REVIEW BY ALEO ASSOCIATES INC. SHALL NOT RELIEVE THE CONTRACTOR OF HIS RESPONSIBILITY FOR ERRORS AND OMISSIONS AND FOR MEETING ALL THE REQUIREMENTS OF THE CONSTRUCTION AND CONTRACT DOCUMENTS.

3. DESIGN LOADS AND DATA:
    - a) GRAVITY LOAD SHALL BE AS NOTED ON FLOOR & ROOF FRAMING PLANS.
    - b) GROUND SNOW LOAD:
      S = Is [Ss(CbCwCsCa) + Sr]
      Is = 1.15 (ULS - 'HIGH'-IMPORTANCE CATEGORY)
      Is = 0.90 (SLS - 'HIGH'-IMPORTANCE CATEGORY)
      Ss = 2.0 kPa (GROUND SNOW LOAD)
      Cb = 0.80 (BASIC ROOF SNOW LOAD)
      Cw = 1.0 (WIND EXPOSURE FACTOR)
      Cs = 1.0 (SLOPE FACTOR)
      Ca = 1.0 (SHAPE FACTOR)
      Sr = 0.4 kPa (ASSOCIATED RAIN LOAD)
    - c) WIND LOAD (BUILDING AS A WHOLE):
      p = Iw q Ce Cg Cp
      Iw = 1.15 (ULS - 'HIGH'-IMPORTANCE CATEGORY)
      Iw = 0.75 (SLS - 'HIGH'-IMPORTANCE CATEGORY)
      q = 0.37 (REFERENCE VELOCITY PRESURE (1in50))
      EXPOSURE CATEGORY 'B'
      Ce = (h/10)^0.20, NOT LESS THAN 0.90
      CpCg = (SEE NBC)
      CpCg = (SEE NBC)
    - d) WIND LOAD (EXTERNAL PRESSURE FOR DESIGN OF COMPONENTS):
      pi = Iw q Ce Cg Cp
      Iw = 1.15 (ULS - 'HIGH'-IMPORTANCE CATEGORY)
      Iw = 0.75 (SLS - 'HIGH'-IMPORTANCE CATEGORY)
      q = 0.37 (REFERENCE VELOCITY PRESSURE (1in50)
      EXPOSURE CATEGORY 'B'
      Ce = (h/10)^0.20, NOT LESS THAN 0.90
      Cg = 2.5
      Cp = (SEE NBC 2005)
    - e) WIND LOAD (INTERNAL PRESSURE FOR DESIGN OF COMPONENTS):
      pi = Iw q Ce Cgi Cpi
      Iw = 1.15 (ULS - 'HIGH'-IMPORTANCE CATEGORY)
      Iw = 0.75 (SLS - 'HIGH'-IMPORTANCE CATEGORY)
      q = 0.37 (REFERENCE VELOCITY PRESURE (1in50))
      EXPOSURE CATEGORY 'B'
      Ce = (h/10)^0.20, NOT LESS THAN 0.90
      Cgi = 2.0
      Cpi = -0.45 to 0.30 (CATEGORY 2)
    - f) EARTHQUAKE:
      METHOD OF ANALYSIS: EQUIVALENT STATIC FORCE PROCEDURE
      IMPORTANCE FACTOR = 1.3 (ULS - 'HIGH' IMPORTANCE CATEGORY)
      SITE CLASS C
      5% SPECTRAL RESPONSE ACCELERATION
      Sa (0.2) = 0.136
      Sa (1.0) = 0.0483
      PGA (Xc) = 0.0663
      Fa = F(0.2) TABLE 4.1.8.4.B = 1.0
      SEISMIC HAZARD INDEX = Ie Fa Sa (0.2) = 0.27
      SEISMIC CATEGORY = SC2
      REQUIREMENT OF OBC TABLE 4.1.8.18 (CATEGORIES 6 - 22) IS NOT APPLICABLE DUE TO LOW SC2 VALUE.

4. FOUNDATIONS, EXCAVATING & BACKFILLING
    - a) FOOTINGS SHALL BE PLACED ON NATURAL UNDISTURBED SOIL AS OUTLINED IN THE GEOTECHNICAL REPORT PREPARED BY CHUNG & VANDER DOELEN ENGINEERING LTD. REPORT NO. 2536 DATED JULY 2, 2025. SEE THE FOUNDATION NOTES ON THE FOUNDATION PLAN DRAWING.
    - b) ALL FOOTING EXCAVATIONS SHALL BE REVIEWED AND APPROVED BY ENGINEER PRIOR TO PLACING CONCRETE
    - c) PROVIDE 10 MPa LEAN CONCRETE UNDER FOUNDATIONS FOR ACCIDENTAL OVER-EXCAVATIONS AND SOFT SPOTS.
    - d) ALL EXCAVATION AND BACKFILLING SHALL BE IN ACCORDANCE WITH THE OCCUPATIONAL HEALTH AND SAFETY ACT, LATEST EDITION.
    - e) BACKFILL AGAINST BOTH SIDES OF WALLS UNTIL THE LOWER ELEVATION IS ATTAINED.
    - f) PROVIDE A MIN. 2'-0" THICK LAYER OF FREE DRAINING GRANULAR BACKFILL TO THE FULL HEIGHT OF ALL FOUNDATION WALLS. BRACE FORMWORK AS REQ.'D UNTIL SLAB IN PLACE.
    - g) ALL FILL MATERIAL SHALL BE AS SPECIFIED ON THE DRAWINGS.
    - h) UNIFORMLY COMPACTED GRANULAR 'A' IN MAXIMUM 8" THICK LOOSE LIFTS TO 100% OF STANDARD PROCTOR MAXIMUM DRY DENSITY.
    - i) UNIFORMLY COMPACTED GRANULAR 'B' TYPE 1 IN MAXIMUM 10" THICK LOOSE LIFTS TO 98% OF STANDARD PROCTOR MAXIMUM DRY DENSITY.
    - j) UNIFORMLY COMPACT NATIVE MATERIAL TO 95% OF STANDARD PROCTOR MAXIMUM DRY DENSITY BY APPROVED METHOD.
    - k) KEEP FOUNDATION EXCAVATIONS FREE OF WATER AT ALL TIMES. NO STANDING WATER SHALL BE PRESENT IN AREA OF FOOTING TO BE POURED AT THE TIME OF TESTING AND THEREAFTER. THE CONTRACTOR SHALL MAKE ARRANGEMENTS FOR SUMPS AND PITS TO DRAIN THE AREA CONTINUOUSLY. [NO EXTRA CAN BE SUBMITTED FOR SITE DRAINAGE]; REFER TO GEOTECHNICAL FOR WATER TABLE, TYP.
    - l) BASEMENT WALLS TO HAVE CONTROL JOINTS SPACED AT MAX. 20'-0" O.C. & AT ALL CONSTRUCTION JOINT LOCATIONS. SAWCUT A 3/4" WIDE NOTCH TO A MIN. OF 1" DEEP AFTER STRIPPING FORMS. FILL JOINT w/ MASTIC CAULKING. PROVIDE EXTERIOR PVC WATERSTOP ACROSS JOINT IF HOT APPLIED WATERPROOFING IS NOT PROVIDED.

5. CONCRETE
    - a) COMPLY TO THE FOLLOWING: CAN 3-A23.1, A23.2, AND A23.3, LATEST EDITION.
    - b) CONCRETE ULTIMATE COMPRESSION STRENGTH AT 28 DAYS SHALL BE 20 MPa FOR FOOTINGS; 25 MPa FOR FLOOR SLABS ON GRADE; 30 MPa FOR FOUNDATION WALLS, PIERS, REINFORCED CONCRETE COLUMNS, AND 32 MPa w/ AIR ENTRAINMENT FOR ALL OUTSIDE CONCRETE; INCLUDING GARAGE SLAB.
    - c) CONCRETE COVER FOR REINFORCING STEEL SHALL BE 3" FOR CONCRETE CAST AGAINST EARTH; 2" FOR PIERS & COLUMNS, 2" FOR WALLS & 2" FOR EXTERIOR CURBS U.N.O.
    - d) EXTERIOR CONCRETE SHALL HAVE BETWEEN 5% AND 7% AIR ENTRAINMENT.
    - e) MAXIMUM SLUMP: 3" AT FLOOR SLABS & 3 1/2" AT ALL OTHER CONCRETE.
    - f) MECHANICALLY VIBRATE ALL CONCRETE.
    - g) CEMENT TYPE: PORTLAND CEMENT TYPE 10.
    - h) THE DESIGN AND FIELD REVIEW OF FORMWORK AND SHORING IS THE CONTRACTOR'S RESPONSIBILITY.
    - i) FORMS SHALL NOT BE REMOVED BEFORE THE CONCRETE COMPRESSIVE STRENGTH 75% OF THE DESIGN STRENGTH (SEE TESTING NOTES).
    - j) FORMWORK USED MUST BE STRIPPED IN A NON DESTRUCTIVE MANNER. CONCRETE REMOVAL SUCH AS CHIPPING, JACK HAMMERING IS NOT ALLOWED.

6. REINFORCING STEEL
    - a) REINFORCING STEEL SHALL COMPLY TO CSA G30.18M LATEST EDITION.
    - b) REINFORCING STEEL SHALL BE DEFORMED, HARD GRADE AND HAVING A MINIMUM YIELD STRENGTH OF 400 MPa. (60 KSi)
    - c) ALL BAR SPLICES AND DEVELOPMENT LENGTHS SHALL COMPLY TO CSA STANDARD.
    - d) ALL BARS MARKED CONTINUOUS SHALL BE TERMINATED IN HOOKS AND DEVELOPED BY CLASS B LAP WHERE SPLICED.
    - e) WWM SHALL BE FLAT SHEETS (NOT ROLLS).

7. MASONRY
    - a) ALL MASONRY WORK SHALL CONFORM TO SECTION 4.4 OF THE ONTARIO BUILDING CODE AND THE CORRESPONDING CSA STANDARD CAN-S304.1 (LATEST EDITION).
    - b) THE MINIMUM 28 DAY COMPRESSIVE STRENGTH FOR ALL BLOCK UNITS SHALL BE 15 MPa.
    - c) ALL BLOCKS SHALL BE MORTAR BEDDED FOR FACE SHELLS.
    - d) MORTAR USED SHALL BE TYPE S.
    - e) THE STRENGTH OF THE CONCRETE USED FOR FILLING BLOCK SHALL BE 20MPa AT 28 DAYS
    - f) PROVIDE HORIZONTAL GALVANIZED LADDER TYPE JOINT REINFORCEMENT (9GA.) AT EVERY 1'-4" VERTICALLY (EVERY 2ND COURSE) FOR ALL BLOCK WEBS UNLESS OTHERWISE NOTED.
    - g) PROVIDE PREFABRICATED HORIZONTAL GALVANIZED LADDER TYPE JOINT REINFORCEMENT (9GA.) SPACED AT 1'-4" VERTICALLY (EVERY 2ND COURSE) FOR ALL WALL CORNERS AND INTERSECTIONS, UNLESS NOTED OTHERWISE.
    - h) ALL BLOCK WORK SHALL BE CONSTRUCTED IN RUNNING BOND.
    - i) WHERE VERTICAL REBARS ARE TO BE GROUTED INTO MASONRY CORES, THE FOLLOWING REQUIREMENTS APPLY:
        - i) PROVIDE DOWELS FROM FOOTING OR FOUNDATION WALL, SAME SIZE AND SPACING AS WALL REINFORCING. SPLICE DOWELS A MIN. 1'-4" WITH WALL BARS AND CAST INTO THE FOUNDATION WALL 1'-2", FOR 15M AND 20M BARS. PROVIDE MATCHING HOOKED DOWEL TO FOOTING.
        - ii) PROVIDE A CONTINUOUS CAVITY, AT LEAST 3" X 4" IN SIZE, FREE OF MORTAR DROPPINGS.
        - iii) PROVIDE SPACERS TO ALIGN REBAR AT A MAXIMUM SPACING OF 96 BAR DIAMETER (2 PER BAR MIN.)
        - iv) AT SPLICES IN VERTICAL BARS, PROVIDE A 36 BAR DIAMETER LAP.
        - v) ALL REINFORCEMENT MUST BE MUST BE INSTALLED AND SECURELY ANCHORED IN PLAC PRIOR TO PLACEMENT OF GROUT.
        - vi) MAXIMUM HEIGHT OF GROUT LIFT = 5'-0"
        - vii) ALL CMU'S USED IN REINFORCED MASONRY SHALL BE TWO CELL UNITS.
    - j) THE CONTRACTOR SHALL NOT CUT ADDITIONAL HOLES THROUGH MASONRY WALLS OTHER THAN SHOWN ON THE STRUCTURAL DRAWINGS.
    - k) BEARING ON MASONRY: BEARING SHALL BE ON BLOCKS FILLED SOLID WITH CONCRETE, FILL THE BLOCKS FOR A LENGTH OF THREE COURSES UNDER BEAMS AND TWO COURSES UNDER LINTELS THAT DO NOT REQUIRE BEARING PLATES.
    - l) FILL MASONRY CORES SOLID AROUND ANCHOR BOLTS.
    - m) ALL MASONRY WORK SHALL NOT BE PERMITTED WITH TEMPERATURE BELOW 5° C, UNLESS PROVISIONS ARE MADE FOR HEATING THE MATERIAL AND PROTECTING THE WORK.
    - n) PROVIDE COMPACTED CONCAVE MORTAR JOINTS.
    - o) LATERALLY SUPPORT MASONRY WORK DURING CONSTRUCTION AS REQUIRED TO SATISFY WIND LOADS
    - p) MASONRY CONTRACTOR SHALL INSTALL ALL LINTELS REQUIRED FOR WALL PENETRATIONS OR ANY OTHER OPENINGS NOT SHOWN OR NOTED ON STRUCTURAL DRAWINGS.

8. STRUCTURAL STEEL
    - a) ALL STRUCTURAL STEEL SHALL BE DESIGNED, FABRICATED AND ERECTED IN ACCORDANCE WITH S16.1, LATEST EDITIONS.
    - b) MATERIALS: ROLLED SHAPES TO G40.21-350W; HOLLOW STRUCTURAL STEEL TO G40.21, 350W CLASS C; ROLLED STEEL PLATES TO ASTM-A36; COLD FORMED SHAPES TO S136-Fy=350W; ELECTRODES TO CSA W48.1 E70-XX; BOLTS TO ASTM A325; AND ANCHOR BOLTS Fy = 300W.
    - c) ALL CONNECTION LOADS INDICATED ON THE DRAWINGS ARE FACTORED LOADS UNO. CONNECTIONS FOR COMPOSITE BEAMS OR GIRDERS SHALL BE DOUBLE ANGLE CONNECTIONS AND EACH CONNECTION SHALL BE DESIGNED TO RESIST 100% OF THE MAXIMUM TOTAL FACTORED UNIFORM LOAD OF THE MEMBER. EACH CONNECTION FOR NON-COMPOSITE BEAMS OR GIRDERS SHALL BE DESIGNED TO RESIST 60% OF THE MAXIMUM TOTAL FACTORED UNIFORM LOAD OF THE MEMBER. NON-COMPOSITE GIRDER TO COLUMN CONNECTIONS SHALL BE DOUBLE ANGLE CONNECTIONS. MOMENT CONNECTIONS SHALL BE DESIGNED TO RESIST 100% OF THE BEAM BENDING MOMENT UNO. FOR ALL OTHER MEMBERS, WELDING AND BOLTING SHALL DEVELOP THE MAXIMUM TOTAL FACTORED UNIFORM LOAD CAPACITY OF THE MEMBERS WHERE THE LOADS ARE NOT SHOWN.
    - d) ALL FIELD CONNECTIONS SHALL BE BOLTED WITH 3/4" Ø A325 BOLTS UNLESS WELDING IS SPECIFIED ON THE DRAWINGS.
    - e) EXPANSION ANCHORS: HILTI "KWIK BOLT 3" OR APPROVED EQUAL U.N.O., EMBEDDMENT LENGTH FOR EXPANSION ANCHORS IN SOLID CONCRETE OR CONC. FILLED MASONRY SHALL BE:
      1/2" DIAMETER = 3 1/2", 5/8" DIAMETER = 4", 3/4" DIAMETER = 5"
    - f) SLEEVE ANCHORS: HILTI "HLC SLEEVE ANCHOR" OR APPROVED EQUAL U.N.O., EMBEDDMENT LENGTH FOR SLEEVE ANCHORS IN HOLLOW CONCRETE BLOCK SHALL BE: 1/2" DIAMETER = 2 1/2" U.N.O.
    - g) ALL STRUCTURAL STEEL SHALL BE CLEAN OF RUST OR ANY OTHER FOREIGN MATERIAL AND SHALL RECEIVE ONE PRIME COAT OF RUST INHIBITIVE METAL PRIMER COLOURED 'GREY' CONFORMING TO C.G.S.B. (1-GP-40M-1979) DO NOT PAINT SURFACES AT AREAS OF CONNECTION UNTIL AFTER THE CONNECTION IS MADE.
    - h) DO NOT PAINT STEEL IN CONTACT WITH CONCRETE, STEEL THAT IS TO BE GALVANIZED OR STEEL THAT IS TO RECEIVE SPRAYED FIRE-PROOFING.
    - i) STRUCTURAL STEEL ERECTOR SHALL PROVIDE ALL NECESSARY TEMPLATES AND TEMPORARY BRACING.
    - j) ALL COLUMN ENDS ARE TO BE MILLED AND WELDED TO BASE PLATES.
    - k) ALIGN STRUCTURE BEFORE PERMANENT WELDING OR BOLTING IS BEGUN.
    - l) PROVIDE SHOP WELDED ANCHORS FOR THE ATTACHEMENT OF MASONRY TO STRUCTURAL STEEL COLUMNS AT 2'-0" O.C. VERT. AT ALL LOCATIONS IN WHICH THE COLUMN FACE IS ADJACENT TO CONCRETE BLOCK UNO. ANCHORS SHALL BE GALV. ADJUSTABLE FLEX-O-LOK W/ MODEL BLT9 TIES BY BLOK-LOK OR EQUIVALENT.
    - m) PROVIDE HOLES AS REQUIRED FOR OTHERS. REFER TO MECHANICAL AND ARCHITECTURAL DRAWINGS. IF OPENING IS NOT SHOWN ON THE STRUCTURAL DRAWINGS, OBTAIN PRIOR APPROVAL.
    - n) REFER TO ARCHITECTURAL DRAWINGS FOR ALL MISCELLANEOUS STRUCTURAL STEEL THAT IS NOT SHOWN OR LABELLED ON THE STRUCTURAL DRAWINGS.
    - o) WELDING SHALL COMPLY TO THE LATEST ISSUE OF CSA STANDARD W59-03.
    - p) STRUCTURAL STEEL CONTRACTOR SHALL BE CERTIFIED BY THE CANADIAN WELDING BUREAU TO THE REQUIREMENTS OF CSA STANDARD W47.1-03 FOR DIVISION 1 OR 2 CERTIFICATION.
    - q) STRUCTURAL SHOP DRAWINGS SHALL BE STAMPED AND SIGNED BY A LICENSED ENGINEER FOR THE CERTIFICATION OF THE DESIGN OF THE CONNECTIONS.
    - r) PROVIDE LINTELS AS SHOWN BELOW FOR ALL MASONRY OPENINGS U.N.O. ON THE LINTEL PLANS. REFER TO ARCHITECTURAL DRAWINGS FOR LOCATION AND SIZE OF OPENINGS FOR LINTELS NOT LABELLED OR SHOWN ON STRUCTURAL DWGS. REFER TO MECHANICAL DRAWINGS FOR ALL REQ'D LINTELS FOR GRILLES, LOUVERS, DUCTS, PIPES OR OTHER ITEMS PENETRATE MASONRY WALLS. STRUCTURAL ENGINEER MUST CONFIRM ALL LINTEL SIZES NOT SHOWN OR NOTED ON THE STRUCTURAL DRAWINGS.
        - i) 4" BRICK OR CONCRETE BLOCK :
          UP TO 4'-0" OPENING — L 3 1/2" X 3 1/2" X 1/4"
          4'-0" TO 5'-4" OPENING — L 4" X 3 1/2" X 1/4" (LLV)
          5'-5" TO 9'-0" OPENING — L 5" X 3 1/2" X 5/16" (LLV)
        - ii) 8" CONCRETE BLOCK :
          UP TO 4'-0" OPENING — 2-L 3 1/2" X 3 1/2" X 1/4"
          4'-0" TO 6'-0" OPENING — 2-L 5" X 3 1/2" X 5/16" (LLV)
    - u) ROOF DECK SHALL BE AS INDICATED ON THE FRAMING NOTES. ALL STEEL DECK SHALL CONFORM TO A.S.T.M. SPECIFICATIONS A653M SQ GRADE 230 AS MANUFACTURED BY VICWEST STEEL INC. OR APPROVED EQUAL. INSTALLATION SHALL BE IN ACCORDANCE WITH CAN/C.S.A. S136 AND CSSBI 10M.
    - v) ROOF DECK SHALL BE CONNECTED TO SUPPORTING STEEL MEMBERS AS REQUIRED BY THE BUILDING DESIGN ENGINEER WITH EITHER 3/4" DIA. WELDS (E60XX ELECTRODES) OR SELF TAPPING GALV SCREW SYSTEM. CONNECTIONS SHALL BE AT LEAST AT EVERY SECOND FLUTE (36/ 4 STD. PATTERN) AND AT ALL PARALLEL BEARING MEMBERS AT 2'-0". SIDE JOINTS SHALL BE FASTENED W/ BUTTONHOLE PUNCHES AT 1'-4" O.C. STARTING AT THE END JOINT U.N.O.. SUBMIT DRAWINGS INDICATING GAUGE & CONNECTIONS SPECIFIED FOR THE PROJECT. CONTRACTOR SHALL TAKE PRECAUTIONS TO PREVENT BURN THROUGH.

9. LIGHT GAUGE STEEL FRAMING:
    - a) THE DESIGN OF THIS STRUCTURE HAS BEEN BASED UPON THE PRODUCT PROPERTIES PRESENTED BY DIETRICH METAL FRAMING CANADA IN MISSISSAUGA, ONTARIO, CA. FINAL DESIGN TO BE CERTIFIED AS SPECIFIED FOR LOADING NOTED.
    - b) STEEL STUDS AND TRACK SECTION PROPERTIES HAVE BEEN DETERMINED IN ACCORDANCE WITH CSA STANDARD CAN/CSA S136-94, LIGHT WEIGHT STEEL FRAMING MEMBERS.
    - c) STEEL SHEET USED FOR STEEL STUD AND TRACK SHALL CONFORM TO THE REQUIREMENTS OF ASTM A446 STANDARD SPECIFICATION FOR STEEL SHEET, ZINC COATED, GALVANIZED BY THE HOT-DIP PROCESS, STRUCTURAL-PHYSICAL QUALITY.
      GRADE A - (33 KSI YIELD) FOR 0.033", 0.036" AND 0.048".
      GRADE D - (50 KSI YIELD) FOR 0.060" AND 0.075".
    - d) FRAMING SIZES AND GAUGES SHOWN ARE MINIMUMS. INCREASE SIZE, GAUGE OR DECREASE SPACING AS REQUIRED TO MEET THE DESIGN LOADS SPECIFIED ON STRUCTURAL GENERAL NOTES. CLEARLY INDICATE DESIGN LOADS ON SHOP DWGS.
    - e) STUD FRAMING USED AS A BACKUP TO MASONRY VENEER REQUIRES A DEFLECTION LIMIT OF L/720, OTHER STUDS REQUIRE A DEFLECTION LIMIT OF L/360 UNDER ALL APPLICABLE LOAD COMBINATIONS.
    - f) CONNECTION DETAILS ARE TO BE DEVELOPED BY THE LIGHT GAUGE ENGINEER. ALL CONNECTIONS ARE TO BE BOLTED OR SELF-DRILLING SCREWS (2 MIN.) TO MEET THE DESIGN LOADS REQUIRED AT THAT SECTION WITH A FACTOR OF SAFETY OF 4.
    - g) ALL BOLTS, SCREWS AND ANCHORS USED IN ASSEMBLIES MUST BE OF CORROSION RESISTANT MATERIAL (MIN. ZINC COATING OF 0.008mm.) COMPATIBLE WITH THE GALVANIZED COATINGS. NO BLACK METAL CONNECTORS WILL BE ACCEPTED. SUBSTITUTIONS MUST BE APPROVED PRIOR.
    - h) WIRE TYING IN STRUCTURAL APPLICATION IS NOT PERMITTED.
    - i) CUTTING OF STEEL FRAMING MEMBERS SHALL BE BY SAW OR SHEAR. NO TORCH OR MANUAL CUTTING IS PERMITTED.
    - j) SPLICING OF STUDS IS NOT PERMITTED. TRACK SPLICES MAY BE ACCOMPLISHED BETWEEN STUD WITH AN ENGINEERED CONNECTION DETAIL INDICATING THE SCREWS OR WELDS REQUIRED PER FLANGE TO EACH PIECE OF TRACK.
    - k) BRIDGING SHALL BE OF A SIZE, SPACING AND TYPE SPECIFIED BY THE STUD DESIGNER. CONNECTIONS AND BRIDGING SHALL BE INSTALLED SO AS TO PROVIDE RESISTANCE TO AXIAL BENDING AND ROTATION OF WALL STUDS FOR THE LOADS.
    - l) WALL TRACK SHALL NOT BE USED TO SUPPORT ANY LOADS UNLESS SPECIFICALLY DESIGNED FOR THAT PURPOSE. SHOP DRAWINGS SHALL CLEARLY INDICATE LOADS.
    - m) TEMPORARY BRACINGS SHALL BE ENGINEERED BY THE STUD DESIGNER AS REQUIRED. BRACES SHALL BE LEFT IN PLACE UNTIL CONSTRUCTION IS APPROVED & PERMANENTLY STABILIZED AND TO THE SATISFACTION OF STUD DESIGNER.
    - n) HOLES THAT ARE FIELD CUT INTO STEEL FRAMING MEMBERS SHALL BE WITHIN LIMITATIONS OF THE PRODUCT AND ITS DESIGN. PROVIDE REINFORCEMENT WHERE HOLES ARE CUT THROUGH LOAD BEARING MEMBERS IN ACCORDANCE WITH MANUFACTURERS RECOMMENDATIONS AND AS APPROVED BY THE ENGINEER.
    - o) COMPLETE BEARING SHALL BE PROVIDED UNDER AXIALLY LOADED STUDS AND TRACKS TO PROVIDE FOR LOAD TRANSFER. GROUT WALL TO MIN 2x THE WALL WIDTH AS PER THE INDUSTRY STANDARD. CONTRACTOR TO REVIEW AND INSPECT THE BEARING SURFACE TO ENSURE FULL AND LEVEL BEARING IS BELOW ALL WALLS.
    - p) THE ALIGNMENTS PLUMBNESS & LEVELNESS OF STUD WALLS SHALL MEET THE SPECIFIED CRITERIA FOR EACH. THE CONTRACTOR SHALL REVIEW & VERIFY.
    - r) THE LOAD - BEARING AND WIND-BEARING METAL STUDS ABOVE THE MAIN FLOOR CONCRETE SLAB IS THE PRIMARY STRUCTURAL SYSTEM FOR THE BUILDING AND REQUIRES TO BE DESIGNED AS A SYSTEM TO SUPPORT THE MULTI STORY FLOOR & BALCONY SYSTEM FOR BOTH GRAVITY & WIND FORCES. A COMPLETE SHOP DRAWING PACKAGE INDICATING THE PRIMARY METAL STUD SUPPORT SYSTEM IS REQUIRED TO INDICATE ALL FRAMING, SPACING, CONNECTIONS AND DETAILS REQUIRED TO SUPPORT THE LOADS, WHICH ARE TO BE CLEARLY INDICATED ON THE PROJECT SHOP DRAWINGS.
    - s) THE SPACING OF STUDS SHALL BE AT <1/8" FROM DESIGN SPACING PROVIDING THAT THE CUMULATIVE ERROR DOES NOT EXCEED THE REQUIREMENTS OF THE FINISHING MATERIALS. LOAD BEARING STUDS MUST BE FREE OF GAPS & CONSTRUCTED TIGHT.
    - t) THE CONTRACTOR(S) IS RESPONSIBLE FOR THE PROPER MEANS AND METHODS OF CONSTRUCTION, SHORING AND BRACING. STRUCTURAL MEMBERS ARE NOT SELF BRACING UNTIL PERMANENT CONNECTION TO THE STRUCTURE IS MADE ACCORDING TO THE PLANS AND SPEC'S.. THE STRUCTURAL ENGINEER ASSUMES NO LIABILITY FOR THE STRUCTURE DURING CONSTRUCTION. THE LOAD-BEARING STUSD FRAMING IS SUGGESTED TO BE BRACED IN AND OUT OF PLANE UNTIL FINAL LAYOUT AND FLOOR CONNECTIONS ARE COMPLETED FOR THE ENTIRE FLOOR AT A MINIMUM. SUBMIT ENGINEERED BRACING DIAGRAMS FOR ERECTOR CLEARLY LABELING ITEMS.
    - u) LIGHT GAUGE STEEL FRAMING DESIGN ENGINEER RETAINED BY THE BUILDING SYSTEM CONTRACTOR SHALL CARRY OUT SEPARATE SITE VISITS TO REVIEW STUD CONSTRUCTION TO CONFORMANCE TO DESIGN PROVIDED. CONTRACTOR SHALL SUBMIT FIELD REPORTS TO THE STRUCTURAL ENGINEER OF RECORD AND ARCHITECT. THE LIGHT GAUGE STEEL DESIGN ENGINEER MUST ALSO CARRY OUT A FINAL REVIEW AND PROVIDE A GENERAL REVIEW LETTER TO PEO & OBC STANDARDS ADDRESSED TO THE OWNER CONFIRMING THAT THE INSTALLED LIGHT GAUGE STEEL FRAMING IS IN CONFORMANCE WITH THE LIGHT GAUGE STEEL FRAMING DESIGN DRAWINGS AND PROJECT SPECIFICATIONS.

10. CHANGES:

NO CHANGES SHALL BE MADE TO THE DESIGN WITHOUT ENGINEERS PERMISSION.

11. NOTIFICATIONS:

CONTRACTOR SHALL NOTIFY ENGINEER OF SIGNS OF DISTRESS OR ANY OTHER INDICATIONS OF ACTUAL OR POTENTIAL DAMAGE TO THE BUILDING.
CONTRACTOR SHALL NOTIFY ENGINEER SHOULD BUILDING SYSTEM ABOVE MAIN FLOOR LEVEL IMPOSE ANY ADDITIONAL LOADS TO THOSE NOTED ON THESE PLANS.

SHOP DRAWINGS AND SUBMITTALS

- a) SUBMIT ELECTRONIC PDF COPIES OF ALL SHOP DRAWINGS AND SUBMITTALS UNO .
- b) SHOP DRAWINGS AND/OR SUBMITTALS THAT REQUIRE CERTIFICATION BY QUALIFIED PROFESSIONAL ENGINEER SHALL BE STAMPED SIGNED & DATED (CERTIFIED) BY AN ENGINEER LICENSED IN THE PROVINCE OF ONTARIO.
- c) SHOP DRAWINGS THAT REQUIRE CERTIFICATION BY A PROFESSIONAL ENGINEER MUST BE STAMPED AT THE TIME REQUIRING ENGINEERS CERTIFICATION ARE NOT STAMPED AS REQUIRED, THEY WILL BE REJECTED WITHOUT REVIEW.
- d) THE CONTRACTOR SHALL ALLOW THE CONSULTANT AN MINIMUM OF 10 WORKING DAYS TO REVIEW SHOP DRAWINGS IS REQUIRED, ANOTHER 10 WORKING DAYS SHALL BE ALLOWED.
- e) NO WORK SHALL BE COMMENCED OR MATERIAL ORDERED FOR WORK REQUIRING SHOP DRAWING SUBMISSION UNTIL THE SUBMISSION HAS BEEN RETURNED TO THE CONTRACTOR BEARING THE STAMP OF THE CONSULTANT.
- f) THE PRIMARY BUILDING SYSTEM DESIGN STUDS & DECK ABOVE THE MAIN FLOOR REQUIRES A LETTER BY A LICENSED ENGINEER TO ACCOMPANY THE SHOP DRAWINGS INDICATING THAT THE SYSTEMS AND THEIR INTERCONNECTIONS HAVE BEEN DESIGNED TO SUIT THE INDICATED LOADINGS. THIS LETTER SHALL BEAR AN ORIGINAL STAMP & SIGNATURE.
- g) THE FOLLOWING ITEMS REQUIRE SHOP DRAWING AND/OR SUBMISSION.

ITEM	ENGINEERS STAMP REQ'D	COMMENTS
REINFORCING STEEL	NO	SUBMIT ERECTION PLANS AND MATERIAL LISTS FOR ALL REBAR SPECIFIED IN CONSTRUCTION DRAWINGS
CONCRETE MIX DESIGNS	NO	SUBMIT ALL CONCRETE MIX DESIGNS TO BE USED
CONCRETE BLOCK MILL REPORT INCL. COMPRESSIVE STRENGTH TEST RESULTS	NO	
MASONRY TIES, ANCHORS AND HORIZONTAL JOINT REINF. SPECS	NO	
MORTAR AND GROUT MIX DESIGNS AND SPECIFICATIONS	NO	
STRUCTURAL STEEL SHOP DRAWINGS	YES	SUBMIT ERECTION PLANS AND PIECE DETAIL DWGS. FOR ALL STRUCTURAL STEEL SPECIFIED IN CONSTRUCTION DRAWINGS
STRUCTURAL PRECAST CONCRETE FLOOR SYSTEM (HOLLOWCORE, INVERTED-T BEAMS)	YES	SUBMIT LAYOUT PLANS FOR ARRANGEMENT OF ALL PRECAST MEMBERS, MAJOR OPENINGS/SLEEVES, SECTIONS SHOWING CONNECTIONS, WELD PLATES, EDGE CONDITIONS, BEARING LENGTH REQUIREMENTS, LOADS, MATERIAL GRADES & FINISHES SUBMIT ENG. CONNECTION DETAILS OF HOLLOWCORE TO BEAM, BEAM TO BEAM, BEAM TO COLUMN & STEEL HEADERS/HANGERS AS REQ'D AT OPENINGS, DESIGNED BY PRECAST ENGINEER
LIGHT GAUGE STEEL FRAMING	YES	SUBMIT FULL SHOP DRAWINGS W/ PLANS, SECTIONS, DETAILS & AN ENGINEERED MAP FOR DESIGN LOAD TO BE SUPPORTED.
WINDOW & CURTAIN WALL SHOP DRAWINGS	YES	SHOP DRAWINGS SHALL SHOW ELEVATIONS, SECTIONS, MULLION SECTION PROPERTIES AND ALL CONNECTIONS.
PRECAST STAIR & LANDING DESIGNS	YES	SHOP DRAWINGS SHALL SHOW REINFORCED SECTIONS, DIMENSIONS AND ALL ENGINERED CONNECTIONS TO FRAMING.
GUARDRAILS & HANDRAILS (STAIRWELLS, TERRACES)	YES	SUBMIT LAYOUT PLANS & DETAILS FOR ENG. CONNECTIONS TO STRUCTURE W/ LOADS, MATERIAL GRADES & FINISHES

TESTING AND FIELD REVIEWS

- a) THE FOLLOWING ITEMS REQUIRE TESTING OR INSPECTION BY A CERTIFIED INDEPENDENT TESTING OR INSPECTION AGENCY, UNO. THE AGENCY SHALL SEND COPIES OF ALL STRUCTURAL TESTING AND INSPECTION REPORTS TO THE STRUCTURAL ENGINEER OF RECORD, ARCHITECT AND GENERAL CONTRACTOR.
- b) THE GENERAL CONTRACTOR SHALL NOTIFY THE INSPECTION AND TESTING AGENCY IN AMPLE TIME OF HIS WORK SCHEDULE AND ALL CHANGES THERETO, ALSO CO-OPERATE FULLY WITH THE TESTING AND INSPECTION AGENCY ON THE PROJECT.
- c) THE TESTING AND INSPECTION AGENCY PAYMENT SHALL BE COORDINATED BETWEEN THE CONTRACTOR AND OWNER FOR BELOW.
- d) THE FOLLOWING TESTING SCHEDULE IS TO BE ALLOWED FOR IN THE CONTRACT. THE CONTRACTOR SHALL OBTAIN PROPOSALS FROM QUALIFIED TESTING AND INSPECTION AGENCIES TO CARRY OUT TESTING IN ACCORDANCE WITH THE TABLE BELOW.

ITEM	FREQUENCY	COMMENTS
PROCTOR TEST FOR COMPACTION OF GRANULAR BASE AND SUB-BASE FILL MATERIALS	BUILDING INTERIOR ONE TEST / 2000 sq.ft.	– BOTH BASE AND SUB-BASE SHALL BE TESTED AT THE SPECIFIED FREQUENCY – AREAS THAT FAIL SHALL BE RE-COMPACTED AND RE-TESTED UNTIL A SUCCESSFUL TEST IS ACHIEVED
SIEVE ANALYSIS	ONE TEST FOR GRANULAR 'A' & GRANULAR 'B' MATERIAL USED	
CONCRETE COMPRESSIVE STRENGTH TESTS -FOOTING -FOUNDATION WALLS -FLOOR SLAB-ON-GRADE -FORMED SLABS/ BEAM -POURED WALLS/ COLUMNS	 ONE TEST / 100 cu.m ONE TEST / 100 cu.m ONE TEST / 100 cu.m ONE TEST / POUR MIN OR 100M ONE TEST / 100 cu.m	– CONCRETE TESTS SHALL CONSIST OF (4) CYLINDERS PROPERLY LABLLED SHOWING LOCATION AND DATE OF POURING – TEST (1) CYLINDER AT 7 DAYS AND (2) CYLINDERS AT 28 DAYS. SHOULD THE 7 & 28 DAY STRENGTH TEST FAIL TO MEET THE DESIGN STRENGTH, THE 4TH CYLINDER SHALL BE TESTED AT 90 DAYS TESTING CYLINDERS STORED ON SITE EXPOSED TO SAME ELEMENTS. DO NOT STRIP FORMS UNTIL 75% OF DESIGN STRENGTH IS ACHIEVED.
CONCRETE SLUMP TEST	EACH TIME CYLINDERS ARE CAST FOR COMPRESSIVE STRENGTH TESTS	DO NOT WATER ADDED AFTER TESTING CONCRETE.
MORTAR USED FOR CONCRETE BLOCK CUBE COMPRESSIVE STRENGTH TESTS	TWO TESTS	– MORTAR TESTS SHALL CONSIST OF (4) SPECIMEN PROPERLY LABLLED SHOWING LOCATION AND DATE OF USE – TEST (1) SPECIMEN AT 7 DAYS AND (2) SPECIMEN AT 28 DAYS. SHOULD THE 7 & 28 DAY STRENGTH TEST FAIL TO MEET THE SPECIFIED DESIGN STRENGTH, THE 4TH CYLINDER SHALL BE TESTED WHEN DIRECTED BY STRUCTURAL ENGINEER
GROUT COMPRESSIVE STRENGTH TESTS	TWO TESTS	– GROUT TESTS SHALL CONSIST OF (4) SPECIMEN PROPERLY LABLLED SHOWING LOCATION AND DATE OF USE – TEST (1) SPECIMEN AT 7 DAYS AND (2) SPECIMEN AT 28 DAYS. SHOULD THE 7 & 28 DAY STRENGTH TEST FAIL TO MEET THE SPECIFIED DESIGN STRENGTH, THE 4TH CYLINDER SHALL BE TESTED WHEN DIRECTED BY STRUCTURAL ENGINEER
STRUCTURAL STEEL BOLTED CONNECTIONS	15% OF CONNECTIONS INCLUDES WELD TO BEARING PL & 100% MOMENT CONNECTIONS	ADDITIONAL AS REQ'D IF DEFICIENCIES ARE NOTED. CONSULT W/ E.O.R. THE COSTS OF ADDITIONAL INSPECTIONS SHALL BE PAID BY THE STRUCTURAL STEEL CONTRACTOR

- e) THE FOLLOWING FIELD REVIEWS ARE REQUIRED. THE CONTRACTOR SHALL OBTAIN PROPOSALS FROM TESTING AND INSPECTION AGENCIES TO CARRY OUT FIELD REVIEWS IN ACCORDANCE WITH THE TABLE BELOW AND SUBMIT TO THE ARCHITECT FOR REVIEW AND SELECTION.

ITEM	FREQUENCY	INSPECTION BY	COMMENTS
FOOTING EXCAVATIONS / BEARING SOIL	PRIOR TO PLACING CONCRETE AT THE COMMENCEMENT OF WORK AND PART-TIME HEREAFTER. IF CONDITIONS CHANGE OR WHEN SPECIAL ATTENTION IS REQ'D, NOTIFY THE APPROPRIATE CONSULTANTS DAYS IN ADVANCE.	TESTING & INSPECTION AGENCY AND STRUCTURAL ENGINEER	– BEARING CAPACITY – REMOVAL OF DELETERIOUS MATERIAL – ELIMINATION OF GROUNDWATER – SPECIAL CONDITIONS REQUIRING ATTENTION
PROOF ROLLING OF SUB-GRADE SOIL	FULL TIME INSPECTION	TESTING & INSPECTION AGENCY	-BUILDING INTERIOR -EXTERIOR PAVED AREAS
REINFORCING STEEL	PRIOR TO PLACING CONCRETE AT THE COMMENCEMENT OF WORK AND PART-TIME THEREAFTER	STRUCTURAL ENGINEER	FINAL PLACEMENT OF REBAR. SPECIAL CONDITIONS THAT REQUIRE INSPECTION WILL BE SPECIFIED BY THE ENGINEER ON SITE. NOTIFY STRUCTURAL ENGINEER FOR INSPECTION PRIOR TO CONCRETE POUR.
MASONRY-CONCRETE BLOCK	RANDOMLY THROUGHOUT COURSE OF WORK	STRUCTURAL ENGINEER	NOTIFY STRUCTURAL ENGINEER PRIOR TO COMMENCEMENT OF WORK.
FLOOR SLAB-ON-GRADE	PRIOR TO PLACING CONCRETE	STRUCTURAL ENGINEER	NOTIFY STRUCTURAL ENGINEER PRIOR TO POURING CONCRETE
STRUCTURAL STEEL & WELDING	RANDOMLY THROUGHOUT ERECTION	STRUCTURAL ENGINEER	NOTIFY STRUCTURAL ENGINEER WHEN INSTALLED & COMPLETELY CONNECTED
STRUCTURAL PRECAST CONC. FLOOR SYSTEM (HOLLOWCORE, INVERTED-T BEAMS)	DURING & AT COMPLETION OF INSTALLATION	PRECAST ENGINEER	REVIEW CONFORMANCE TO DESIGN AND SHOP DRAWINGS. PROVIDE LETTER TO ENGINEER OF RECORD.
LIGHT GAUGE STEEL FRAMING	DURING & AT COMPLETION OF INSTALLATION	METAL STUD ENGINEER	REVIEW CONFORMANCE TO DESIGN AND SHOP DRAWINGS. VERIFICATION OF ALIGNMENT & BEARING OF STUDS. PROVIDE LETTER TO E.O.R..
CURTAIN WALL	AT THE BEGINNING OF INSTALLATION	GLAZING DESIGN ENGINEER	NOTIFY DESIGNER PRIOR TO START OF WORK (INSTALLATION & CONNECTION).

DRAWING LEGEND AND ABBREVIATIONS

UNLESS OTHERWISE NOTED, DESIGN LOADS SHOWN ARE SPECIFIED (UNFACTORED) LOADS, TO BE USED FOR ULS DESIGN. FOR POINT LOADS, IF ONLY ONE LOAD IS GIVEN, CONSIDER IT LIVE LOAD. FOR WIND AND SNOW LOADS TO BE USED FOR SLS DESIGN, SEE PLANS.

AB	ANCHOR BOLT
AESS	ARCHITECTURALLY EXPOSED STRUCTURAL STEEL
Af	FACTORED AXIAL LOAD IN kips (+ INDICATES TENSION, - INDICATES COMPRESSION)
ALT	ALTERNATE
ARCH	ARCHITECTURAL
BOTT	BOTTOM
BLL	BOTTOM LOWER LAYER (REINFORCING)
BM	BEAM
BOF	ELEV BOTTOM OF FOOTING
BP	BEARING/BASE PLATE
BSMT	BASEMENT
BUL	BOTTOM UPPER LAYER (REINFORCING)
CA	COLUMN ABOVE ONLY (NO COLUMN BELOW)
c	CAMBER
CANT	CANTILEVER
CB	COLUMN BELOW
C/C	CENTRE TO CENTRE
CJ	CONSTRUCTION JOINT
CL	CLEAR
CLS	CLADDING TO HAVE LATERIAL SUPPORT AT THIS LEVEL
COMP	COMPOSITE
C	COLUMN
CONC	CONCRETE
CONT	CONTINUOUS
CWS	CLADDING SELF WEIGHT & LATERIAL AT THIS LEVEL
DET	DETAIL
DIA	DIAMETER
DIM	DIMENSION
DL	DEAD LOAD IN psf
DN	DOWN
DP	DEEP
DWG	DRAWING
DWL	DOWEL
EA	EACH
ECR	EPOXY COATED REINFORCEMENT
EE	EACH END
EF	EACH FACE
EJ,	EXPANSION JOINT
EL, ELEV	ELEVATION
EMBED	EMBEDMENT
EQ	EQUAL
EW	EACH WAY
EX, EXIST	EXISTING
FIN	FINISHED
FL	FLOOR
FMC	FULL MOMENT CONNECTION
FTG	FOOTING
f'c	COMPRESSIVE STRENGTH OF CONC
fy	YIELD STRENGTH
GALV	GALVANIZED STEEL
GB	GRADE BEAM
GL	GRIDLINE
H, HOR	HORIZONTAL
HDG	HOT DIPPED GALVANIZED
HEF	HORIZONTAL EACH FACE
HH	HOOK-HOOK (HOOK EACH END)
HIC	HORIZONTAL IN CENTRE
HK	HOOK
HP	HIGH POINT
HSC	HORIZONTAL SLOTTED CONNECTION
JG	JOIST GIRDER
ld	DEVELOPMENT LENGTH OF REBAR
L	SINGLE ANGLE
┘└	DOUBLE ANGLES
LDV	LONG DIM. VERT.
LG	LONG/LENGTH
UL	UPPER LEVEL BM/JOIST
LL	LOWER LEVEL BM/JOIST
LL	LIVE LOAD IN psf
LLH	LONG LEG HORIZONTAL
LLV	LONG LEG VERTICAL
LSV	LONG SIDE VERTICAL
LSH	LONG SIDE HORIZONTAL
LP	LOW POINT

MAX	MAXIMUM
Mf	FACTORED MOMENT IN k.ft
MJ	MOVEMENT JOINT
MIN	MINIMUM
MTf	FACTORED TORSION IN k.ft
NTS	NOT TO SCALE
NBC	NATIONAL BUILDING CODE
OBC	ONTARIO BUILDING CODE
OC	ON CENTRE
O/0	OUT TO OUT
OPEN, OPNG	OPENING
P	POINT LOAD IN kips
Pf	FACTORED POINT LOAD IN kips
PL	PLATE
RA	ROOF ANCHOR
RD	ROOF DRAIN
REINF	REINFORCEMENT
RF	RIGID FRAME
Rf	FACTORED REACTION IN kips
RHf	FACTORED HORIZ. REACTION IN kips
SDF	STEP DOWN FOOTING
SDL	SUPERIMPOSED DL
SECT	SECTION
SIM	SIMILAR
SJ	STEEL JOIST
SLS	SERVICEABILITY LIMIT STATE
SL	SLAB
SL1, SL2	SHELF ANGLE 1, ETC
SOG	SLAB ON GRADE
STIR	STIRRUP
STIFF	STIFFENER
t	TOTAL THICKNESS
T	TOP
TEW	TOP EACH WAY
TH	THICK
TJ	TIE JOIST
TLL	TOP LOWER LAYER (REINFORCING)
TOF	TOP OF FOOTING
TUL	TOP UPPER LAYER (REINFORCING)
TYP	TYPICAL
ULS	ULTIMATE LIMIT STATE
U/S	UNDERSIDE
UNO	UNLESS NOTED OTHERWISE
UPT	UPTURNED
VB	VERTICAL BRACING
V, VEF	VERTICAL, VERTICAL EACH FACE
VIC	VERTICAL IN CENTRE
Vf	FACTORED SHEAR IN kips
V, VERT, VERTS	VERTICAL, VERTICALS
VSC	VERTICALLY SLOTTED CONNECTION TO ALLOW FOR DEFLECTION
VXB	VERTICAL 'X' BRACING
WC	WIND COLUMN
WP	WALL PLATE
WWM	WELDED WIRE MESH

X SECTION NUMBER
Y SECTION DRAWING
Z REFERENCE

LIST OF DRAWINGS

S100 GENERAL NOTES
S200 FOUNDATION PLAN, NOTES, SCHEDULES, SECTIONS, DETAILS
S300 SLAB ON GRADE PLAN + NON LOAD BEARING MASONRY WALL PLAN & LOAD BEARING MASONRY WALL & LINTEL PLAN
S400 ROOF FRAMING PLAN, NOTES, SECTIONS, DETAILS

MUNICIPAL APPROVAL STAMP

jptA

jp thomson architects ltd
2001 Provincial Rd, Unit 6A,
Windsor, Ontario, N8W 5V7
www.jpthomson.com
t 519-256-3131

SEAL:

REGISTERED PROFESSIONAL ENGINEER
May 15, 2026
P.A. ALEO
100104366
PROVINCE OF ONTARIO

CONSULTANT:

ALEO ASSOCIATES INC.
CONSULTING ENGINEERS
325 DEVONSHIRE RD., WINDSOR, ONTARIO, CANADA N8Y 2L3
TELEPHONE (519) 254-7926 FACSIMILE (519) 254-0895

CONSULTANT SEAL:

DRAWING INFO:

A DETAIL NO.
B LOCATION SHEET
C DETAILED ON

COPYRIGHT:

ISSUANCES:

No.	Issued for/Description	Date
1.	80% OWNER REVIEW	2025-08-11
2.	PERMIT	2025-11-28
3.	PERMIT RE-ISSUE	2026-03-02
4.	TENDER	2026-04-09
5.	PERMIT RE-ISSUE	2026-05-15

CLIENT:

Waterloo Catholic District School Board
480 Dutton Drive,
Waterloo, ON N2L 4C6

PROJECT TITLE:

St. Gregory Catholic Elementary School Addition and Renovations
34 Osborne St.
Cambridge, ON
N1S 3H1

DRAWING TITLE:

GENERAL NOTES

DATE: 2026-03-02
DRAWN BY: SAS
SCALE: AS NOTED
PROJECT NO: 25-106
ALEO PROJECT NO: 8983
DRAWING NO: S-100

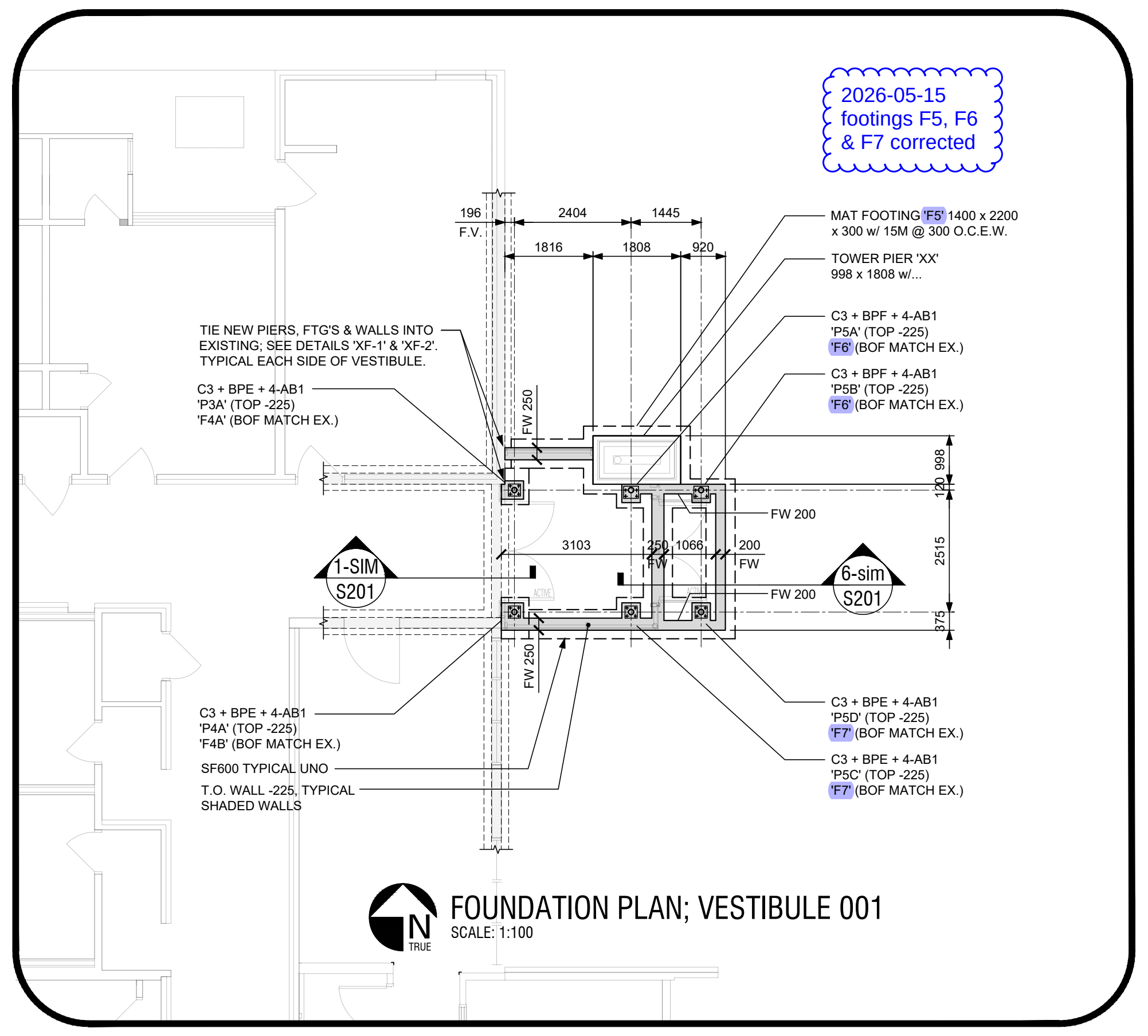

2026-05-15
footings F5, F6
& F7 corrected

MAT FOOTING 'F5' 1400 x 2200 x 300 w/ 15M @ 300 O.C.E.W.

TOWER PIER 'XX' 998 x 1808 w/...

C3 + BPF + 4-AB1 'P5A' (TOP -225) 'F6' (BOF MATCH EX.)

C3 + BPF + 4-AB1 'P5B' (TOP -225) 'F6' (BOF MATCH EX.)

TIE NEW PIERS, FTG'S & WALLS INTO EXISTING; SEE DETAILS 'XF-1' & 'XF-2'. TYPICAL EACH SIDE OF VESTIBULE.

C3 + BPE + 4-AB1 'P3A' (TOP -225) 'F4A' (BOF MATCH EX.)

C3 + BPE + 4-AB1 'P4A' (TOP -225) 'F4B' (BOF MATCH EX.)

SF600 TYPICAL UNO

T.O. WALL -225, TYPICAL SHADED WALLS

C3 + BPE + 4-AB1 'P5D' (TOP -225) 'F7' (BOF MATCH EX.)

C3 + BPE + 4-AB1 'P5C' (TOP -225) 'F7' (BOF MATCH EX.)

FOUNDATION PLAN; VESTIBULE 001
SCALE: 1:100

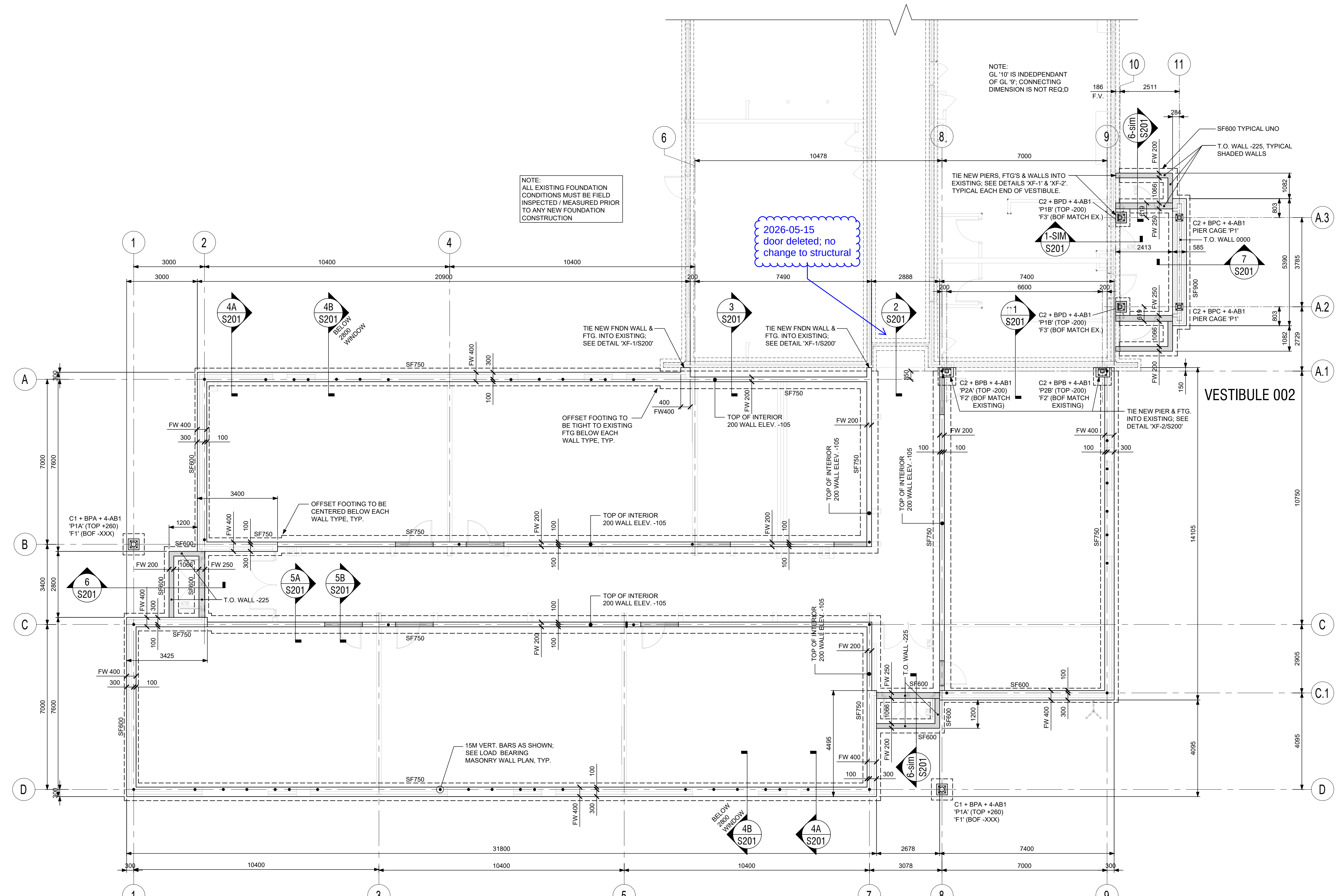

NOTE:
ALL EXISTING FOUNDATION CONDITIONS MUST BE FIELD INSPECTED / MEASURED PRIOR TO ANY NEW FOUNDATION CONSTRUCTION

NOTE:
GL '10' IS INDEDPENDANT OF GL '9'; CONNECTING DIMENSION IS NOT REQ;D

2026-05-15
door deleted; no
change to structural

SF600 TYPICAL UNO

T.O. WALL -225, TYPICAL SHADED WALLS

TIE NEW PIERS, FTG'S & WALLS INTO EXISTING; SEE DETAILS 'XF-1' & 'XF-2'. TYPICAL EACH END OF VESTIBULE.

C2 + BPD + 4-AB1 'P1B' (TOP -200) 'F3' (BOF MATCH EX.)

C2 + BPC + 4-AB1 PIER CAGE 'P1'

T.O. WALL 0000

TIE NEW FNDN WALL & FTG. INTO EXISTING; SEE DETAIL 'XF-1/S200'

OFFSET FOOTING TO BE TIGHT TO EXISTING FTG BELOW EACH WALL TYPE, TYP.

TOP OF INTERIOR 200 WALL ELEV. -105

C2 + BPB + 4-AB1 'P2A' (TOP -200) 'F2' (BOF MATCH EXISTING)

C2 + BPB + 4-AB1 'P2B' (TOP -200) 'F2' (BOF MATCH EXISTING)

TIE NEW PIER & FTG. INTO EXISTING; SEE DETAIL 'XF-2/S200'

C1 + BPA + 4-AB1 'P1A' (TOP +260) 'F1' (BOF -XXX)

OFFSET FOOTING TO BE CENTERED BELOW EACH WALL TYPE, TYP.

T.O. WALL -225

15M VERT. BARS AS SHOWN; SEE LOAD BEARING MASONRY WALL PLAN, TYP.

O. WALL -225

FOUNDATION PLAN
SCALE: 1:100

FOUNDATION NOTES:

1. REFER TO FOUNDATION NOTES ON S100 & NOTES ON FOUNDATION PLAN FOR ADDITIONAL INFO.
2. ACCORDING TO THE GEOTECHNICAL INVESTIGATION PREPARED BY CHUNG & VANDER DOELEN ENGINEERING LTD. REPORT NO. 2536 DATED JULY 2, 2025:

   FOOTINGS SHALL BE PLACED ON NATURAL UNDISTURBED SOIL CAPABLE OF SUSTAINING A GEOTECHNICAL RESISTANCE AT ULTIMATE LIMIT STATES IN ACCORDANCE WITH THE TABLE BELOW:

FOOTING BEARING ELEVATION (m) (REFER TO SOILS REPORT SECTION 6.2)	ISOLATED SQUARE FTG'S (kPa)	CONTINUOUS FTG'S (kPa)
FOUNDING DEPTH ELEV. = 287.30 TYPICALLY, TO ELEV. 284.50 IN THE VICINITY OF BORE HOLE NO. 1	300	300

   FOOTINGS SHALL BE PLACED ON NATURAL UNDISTURBED SOIL CAPABLE OF SUSTAINING A GEOTECHNICAL RESISTANCE AT SERVICEABILITY LIMIT STATES IN ACCORDANCE WITH THE TABLE BELOW:

FOOTING BEARING ELEVATION (m) (REFER TO SOILS REPORT SECTION 6.2)	ISOLATED SQUARE FTG'S (kPa)	CONTINUOUS FTG'S (kPa)
FOUNDING DEPTH ELEV. = 287.30 TYPICALLY, TO ELEV. 284.50 IN THE VICINITY OF BORE HOLE NO. 1	200	200

3. CENTER FOOTINGS UNDER CENTROID OF WALL, PIER AND COLUMNS ABOVE U.N.O.
4. ELEVATIONS ARE BASED ON THE ARCHITECTURAL DATUM WHICH SETS THE FINISHED FLOOR ELEV. AT 0000. (GEODETIC ELEVATION = 289.02 m)
5. REFER TO FOUNDATION PLAN AND FOUNDATION SECTIONS FOR ALL BOTTOM OF FOOTING ELEVATIONS.
6. PROTECT FOOTINGS, WALLS AND ADJACENT SOIL AGAINST FREEZING AND FROST ACTION AS REQUIRED AT ALL TIMES DURING CONSTRUCTION.
7. ALL FOUNDATION WALLS SHALL HAVE 15M CONT. TOP BARS AS INDICATED IN SECTION. ALL FOUNDATION WALLS SHALL HAVE VERTICAL BARS w/ DOWELS TO FOOTING. REFER TO FOUNDATION PLAN, FOUNDATION WALL SECTIONS, ENLARGED PLAN DETAILS & REINFORCING DETAILS FOR ALL TYPICAL AND ADDITIONAL WALL REINFORCING, TYP.
8. AT MASONRY WALLS WHERE VERT REINF IS REQ'D, PROVIDE VERTICAL DOWELS TO TOP OF FOUNDATION WALLS, SIZE & SPACING TO MATCH MASONRY WALL REINFORCING BARS:
   15M BARS SHALL BE 2'-6" LONG EMBEDDED 1'-2" IN TOP OF WALL, TYP.
9. PROVIDE WALL CONSTRUCTION JOINTS AS PER DETAILS AT THE START AND STOP OF WALL POURING AS NECESSARY.
10. FOUNDATION CONTRACTOR TO COORDINATE WITH ALL TRADES, THE LOCATION OF ALL PIPE SLEEVES PASSING THROUGH FOUNDATION WALLS. PIPING IS NOT TO RUN THROUGH FOOTINGS. FOOTINGS TO BE STEPPED DOWN TO SUIT, FIELD VERIFY .

11a. DRAWING LEGEND - FOUNDATION PLAN:

F_	FOOTING MARK, SEE FOOTING SCHEDULE
SF_	STRIP FOOTING MARK, SEE FOOTING SCHEDULE
P_	PIER MARK, SEE PIER SCHEDULE
C _	COLUMN MARK, SEE COLUMN SCHEDULE
BPL _	BASE PLATE MARK, SEE COLUMN SCHEDULE
AB_	ANCHOR BOLT, SEE COLUMN SCHEDULE
FW_	CONCRETE FOUNDATION WALL, SEE CONCRETE FOUNDATION WALL SCHEDULE
TOP	TOP OF PIER, SEE PLAN
TOF	TOP OF FOOTING, SEE PLAN
BOF	BOTTOM OF FOOTING, SEE PLAN
ELEV. XXXX / ELEV. XXXX	SYMBOL ON PLAN INDICATES STEP FOOTING, SEE STEP FOOTING DETAIL
▨	SHADED AREA DENOTES HOLD POURED CONC FNDN WALLS LOW @ -12" (99'-0") AT DOOR OPENINGS, TOPS OF PIERS, & WHERE SHOWN ON PLAN. SEE PLANS AND SECTIONS FOR ELEVATIONS, TYP.
▨	SHADED AREA DENOTES HOLD TOPS OF PIERS LOW @ -16" AT COLUMNS DENOTED WITH "RWL" (RAIN WATER LEADER) (98'-8"). SEE PLANS AND SECTIONS FOR ELEVATIONS, TYP.

11b. DRAWING LEGEND - FOUNDATION SECTIONS:

▨	DENOTES BACKFILL (REFER TO SITE PLAN FOR BACKFILL REQUIREMENTS)
▨	DENOTES UNDISTURBED SOIL
Gran.'A'	DENOTES GRANULAR 'A'
Gran.'B'	DENOTES GRANULAR 'B'
▨	DENOTES CLEARSTONE
▨	DENOTES POURED CONCRETE (SECTION VIEW)

COLUMN SCHEDULE

MARK	SIZE	BPL TYPE	BPL SIZE	ANCHORS	REMARKS
C1	HSS 219 (O.D.) x 6.4	BPA	PL 19 x 320 x 320	4 - AB1 (20 DIAM.)	SEE NOTES 1 TO 4
C2	HSS 152x152x6.4	BPB	PL 19 x 305 x 360	4 - AB1 (20 DIAM.)	SEE NOTES 1 TO 4
		BPC	PL 19 x 305 x 305	4 - AB1 (20 DIAM.)	
		BPD	PL 19 x 305 x 305	4 - AB1 (20 DIAM.)	
C3	HSS 114 (O.D.) x 6.4	BPE	PL 19 x 250 x 250	4 - AB1 (20 DIAM.)	SEE NOTES 1 TO 4
		BPF	PL 19 x 250 x 320	4 - AB1 (20 DIAM.)	

NOTES:
1. PROVIDE 1 1/2" MAX SHRINK COMPENSATING GROUT UNDER ALL BASE PLATES.
2. REFER TO PLAN, PIER, ANCHOR BOLT, AND BASE PLATE DETAILS FOR FURTHER INFORMATION, TYP.
3. G.C. TO COORDINATE ANCHOR BOLT PATTERN, AND BASE PLATE ORIENTATION / OFFSET AS REQ'D.
4. AB1: 3/4" DIAM. ANCHOR BOLTS (F1454 36KSI), SHALL HAVE 18" EMBEDMENT + 5" PROJECTION ABOVE TOP OF PIER + 4" HOOK. (SEE "AB1" DETAIL).

PIER SCHEDULE

PIER MARK	PIER SIZE		PIER REINFORCEMENT			REMARKS
	WIDTH	LENGTH	VERTICAL	HORIZONTAL	CAGE	
P1A	460	460	4 - 20M	10M @ 300 O.C.	P1	SEE NOTES 1 - 3
P1B	460	460	4 - 20M	10M @ 300 O.C.	P1	SEE NOTES 1 - 4
P2A, P2B	400	580	4 - 20M	10M @ 300 O.C.	P2	SEE NOTES 1 - 4
P3A	380	460 +/-	4 - 20M	10M @ 300 O.C.	P3	SEE NOTES 1 - 3
P4A	315	460 +/-	4 - 20M	10M @ 300 O.C.	P3	SEE NOTES 1 - 3
P5A	380	380	4 - 20M	10M @ 300 O.C.	P3	SEE NOTES 1 - 3
P5B	380	380	4 - 20M	10M @ 300 O.C.	P3	SEE NOTES 1 - 3
P5C	380	315	4 - 20M	10M @ 300 O.C.	P3	SEE NOTES 1 - 4
P5D	315	365	4 - 20M	10M @ 300 O.C.	P3	SEE NOTES 1 - 4

NOTES:
1. SEE INDIVIDUAL PIER DETAILS FOR DIMENSIONAL INFORMATION.
2. SEE OTHER SCHEDULE(S) FOR FURTHER INFORMATION.
3. SEE PLAN AND DETAILS FOR SHAPE / ORIENTATION OR ABUTTING FOUNDATION WALLS.
4. DOWEL INTO EXISTING; SEE DETAILS. FIELD VERIFY EXISTING CONDITIONS.

FOOTING SCHEDULE

MARK	SIZE			FOOTING REINFORCEMENT			REMARKS
	WIDTH	LENGTH	DEPTH	BOTTOM	MID-DEPTH	TOP	
F1	900	900	300	3-15M E.W.	N/A	N/A	
F2	750	750	600	3-15M E.W.	N/A	N/A	SEE NOTE 1
F3	600	750	600	3-15M E.W.	N/A	N/A	SEE NOTE 1
F4A	570+/-	750	600	3-15M E.W.	N/A	N/A	SEE NOTE 1
F4B	570+/-	850	600	3-15M E.W.	N/A	N/A	SEE NOTE 1
F5	1400	2200	300	15M @ 300 E.W.	N/A	N/A	
F6	600 +/-	600 +/-	300	15M @ 300 E.W.	N/A	N/A	SEE NOTE 3
F7	600 +/-	600 +/-	300	15M @ 300 E.W.	N/A	N/A	SEE NOTE 3
SF600	600	CONT.	300	N/A	2-15M CONT.	N/A	SEE NOTES 1 & 2
SF750	750	CONT.	300	N/A	3-15M CONT.	N/A	SEE NOTES 1 & 2
SF900	900	CONT.	300	N/A	3-15M CONT.	N/A	SEE NOTES 1

NOTES:
1. DOWEL INTO EXISTING WHERE SHOWN ON PLAN; SEE DETAILS. FIELD VERIFY EXISTING CONDITIONS.
2. STRIP FOOTING; BARS AT MID-DEPTH
3. INTEGRAL WITH STRIP FOOTINGS AND / OR MAT FOOTING; SEE PLAN

2026-05-15
footings F5, F6
& F7 corrected

FOUNDATION WALL SCHEDULE

MARK	THICKNESS	VERTICAL REINF.	HORIZONTAL REINF.	REMARKS
FW400	400	15M @ 1800 O.C. EACH FACE	1-15M CONT. TOP EACH FACE	SEE NOTES 1 - 4
FW200	200	15M @ 1800 O.C. CTRD	1-15M CONT. TOP CTRD	SEE NOTES 1 - 4
FW250	250	15M @ 1800 O.C. CTRD	1-15M CONT. TOP CTRD	SEE NOTES 1 - 4

NOTES:
1. SEE FOUNDATION PLAN FOR LOCATIONS, TYP.
2. SEE FOUNDATION PLAN FOR ADDITIONAL REINFORCEMENT, TYP.
3. REFER TO FOUNDATION NOTES FOR ADDITIONAL INFORMATION, TYP.
4. PROVIDE STD. HOOK OR MATCHING HOOKED DOWEL TO FOOTING, SEE FOUNDATION NOTES, TYP.

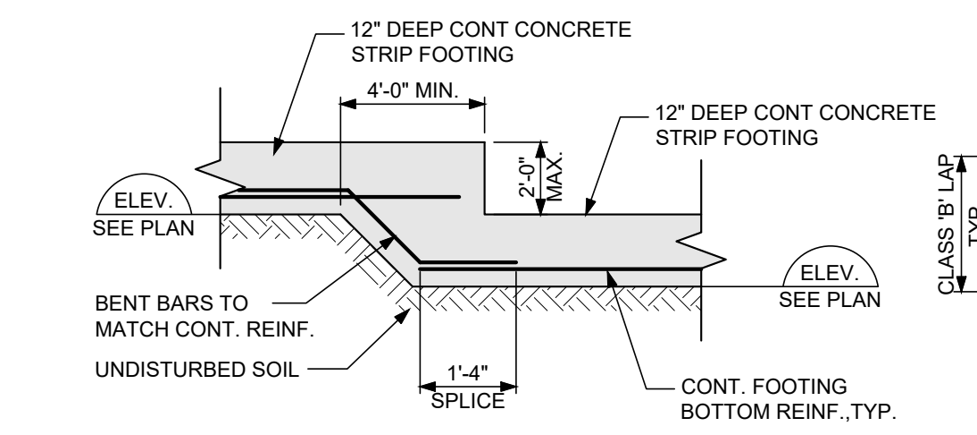
12" DEEP CONT CONCRETE STRIP FOOTING
4'-0" MIN.
12" DEEP CONT CONCRETE STRIP FOOTING
ELEV. SEE PLAN
BENT BARS TO MATCH CONT. REINF.
UNDISTURBED SOIL
1'-4" SPLICE
CONT. FOOTING BOTTOM REINF., TYP.

A
S200
TYPICAL STEP FOOTING
BOTTOM BARS
SCALE: NTS

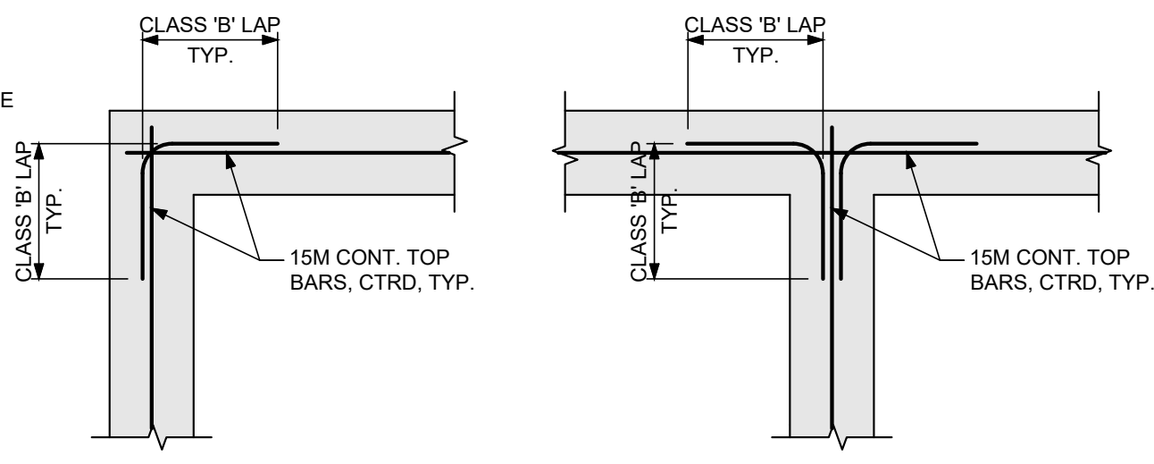

B
S200
TYPICAL CORNER REINFORCEMENT;
MONOLITHIC POUR
SINGLE REBAR LAYER
SCALE: NTS

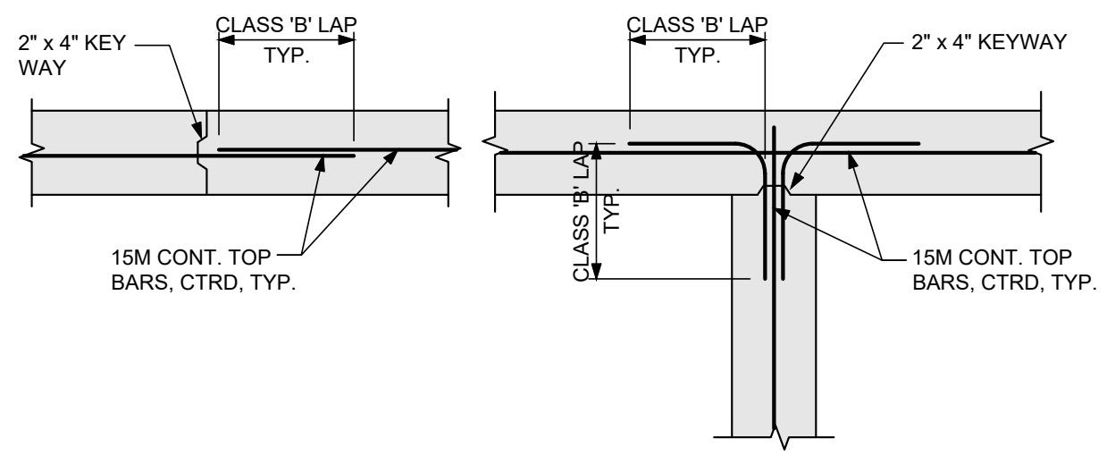

C
S200
TYPICAL CORNER REINFORCEMENT;
WITH CONSTRUCTION JOINT
SINGLE REBAR LAYER
SCALE: NTS

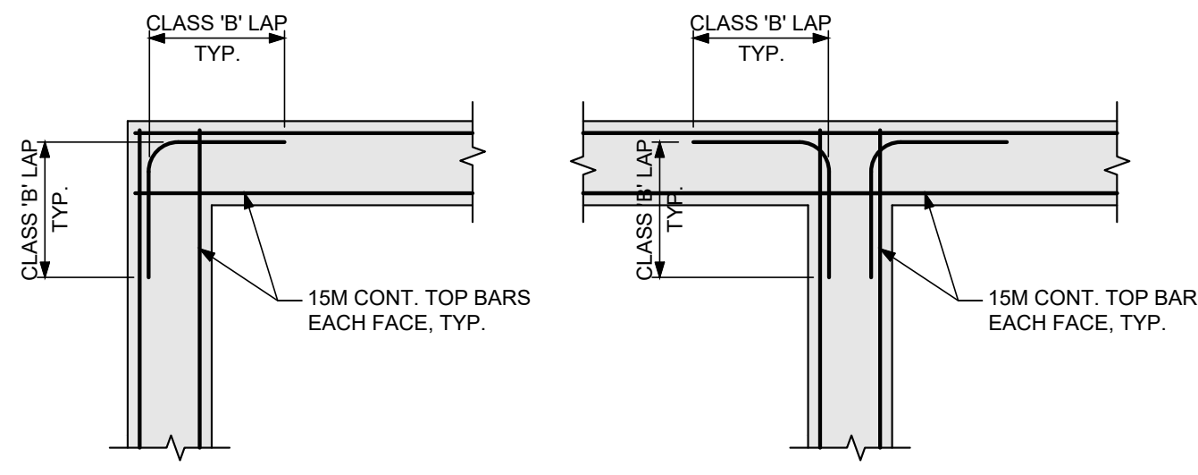

D
S200
TYPICAL CORNER REINFORCEMENT;
MONOLITHIC POUR
DOUBLE REBAR LAYER
SCALE: NTS

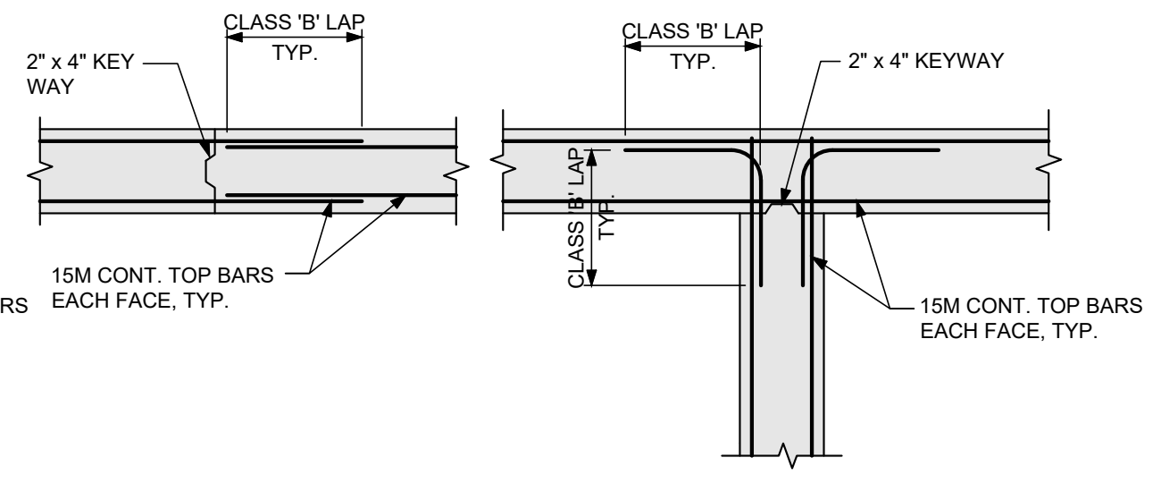

E
S200
TYPICAL CORNER REINFORCEMENT;
WITH CONSTRUCTION JOINT
DOUBLE REBAR LAYER
SCALE: NTS

MUNICIPAL APPROVAL STAMP

jptA

jp thomson architects ltd
2001 Provincial Rd, Unit 6A,
Windsor, Ontario, N8W 5V7
www.jpthomson.com
t 519-256-3131

SEAL:
May 15, 2026
P.A. ALEO
100104366

CONSULTANT:
ALEO ASSOCIATES INC.
CONSULTING ENGINEERS
325 DEVONSHIRE RD., WINDSOR, ONTARIO, CANADA N8Y 2L3
TELEPHONE (519) 254-7926 FACSIMILE (519) 254-0895

CONSULTANT SEAL:

DRAWING INFO:
A DETAIL NO.
B LOCATION SHEET
C DETAILED ON

COPYRIGHT:

ISSUANCES:

No.	Issued for/Description	Date
1.	80% OWNER REVIEW	2025-08-11
2.	PERMIT	2025-11-28
3.	PERMIT RE-ISSUE	2026-03-02
4.	TENDER	2026-04-09
5.	PERMIT RE-ISSUE	2026-05-15

CLIENT:
Waterloo Catholic District School Board
480 Dutton Drive,
Waterloo, ON N2L 4C6

PROJECT TITLE:
St. Gregory Catholic Elementary School Addition and Renovations

34 Osborne St.
Cambridge, ON
N1S 3H1

DRAWING TITLE:
FOUNDATION PLAN, SCHEDULES, TYPICAL DETAILS

DATE: 2026-03-02
DRAWN BY: SAS
SCALE: AS NOTED
PROJECT NO: 25-106
ALEO PROJECT NO: 8983
DRAWING NO: S-200

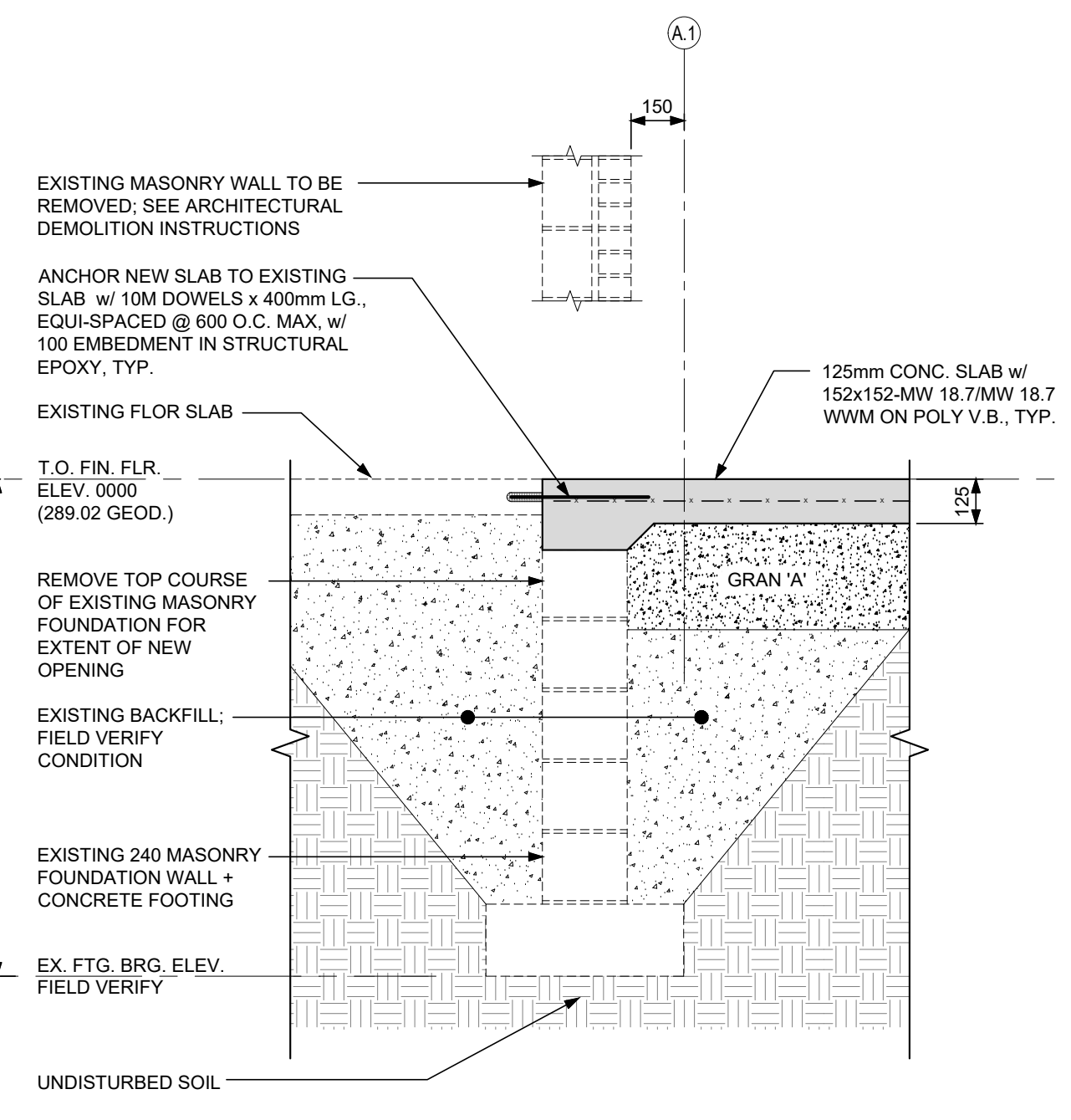

A.1
150
EXISTING MASONRY WALL TO BE REMOVED; SEE ARCHITECTURAL DEMOLITION INSTRUCTIONS
ANCHOR NEW SLAB TO EXISTING SLAB w/ 10M DOWELS x 400mm LG., EQUI-SPACED @ 600 O.C. MAX, w/ 100 EMBEDMENT IN STRUCTURAL EPOXY, TYP.
125mm CONC. SLAB w/ 152x152-MW 18.7/MW 18.7 WWM ON POLY V.B., TYP.
EXISTING FLOR SLAB
T.O. FIN. FLR. ELEV. 0000 (289.02 GEOD.)
125
GRAN 'A'
REMOVE TOP COURSE OF EXISTING MASONRY FOUNDATION FOR EXTENT OF NEW OPENING
FIELD VERIFY
EXISTING BACKFILL; FIELD VERIFY CONDITION
EXISTING 240 MASONRY FOUNDATION WALL + CONCRETE FOOTING
EX. FTG. BRG. ELEV. FIELD VERIFY
UNDISTURBED SOIL

1 SECTION S201 SCALE: 1:20

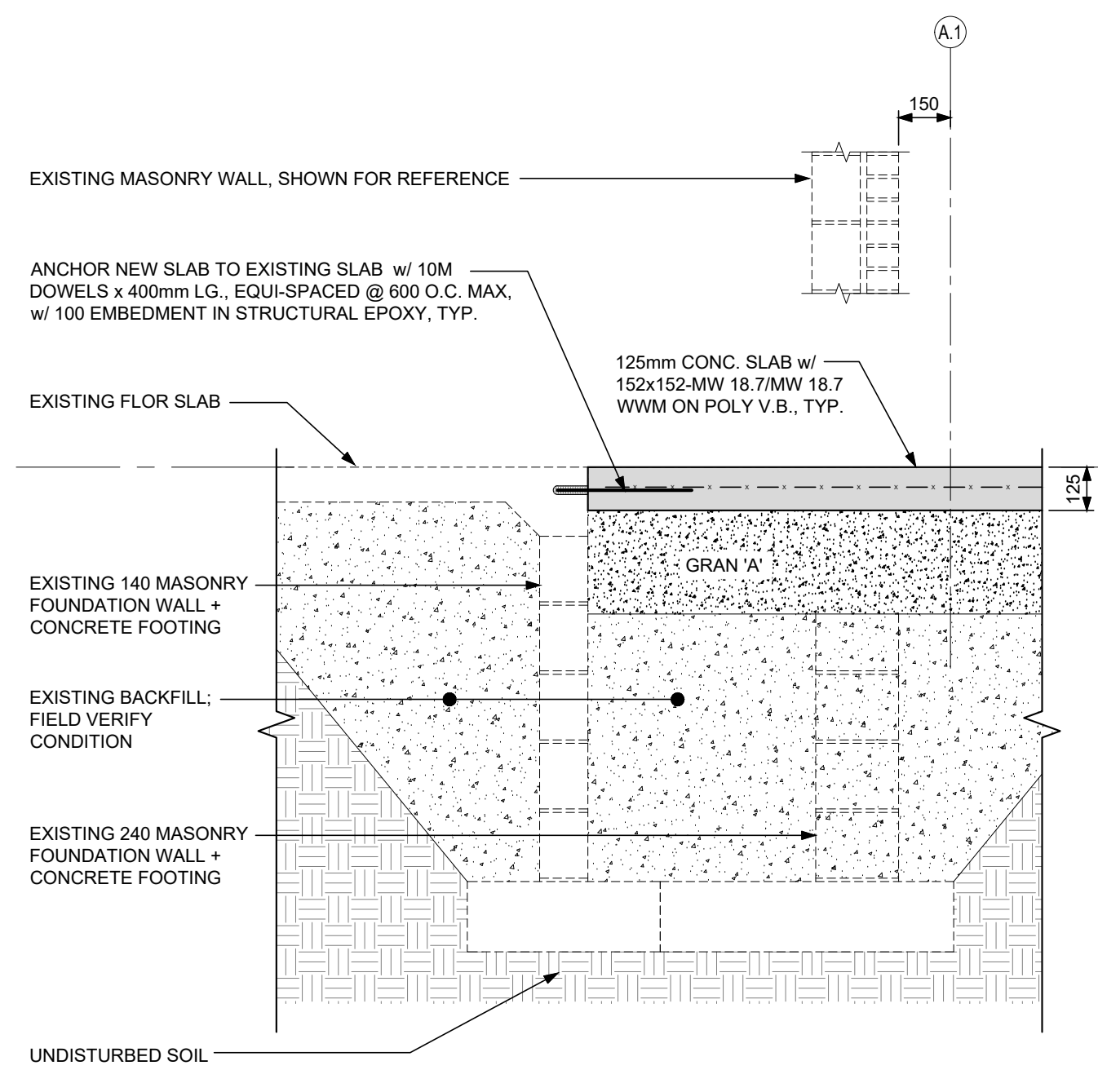

A.1
150
EXISTING MASONRY WALL, SHOWN FOR REFERENCE
ANCHOR NEW SLAB TO EXISTING SLAB w/ 10M DOWELS x 400mm LG., EQUI-SPACED @ 600 O.C. MAX, w/ 100 EMBEDMENT IN STRUCTURAL EPOXY, TYP.
125mm CONC. SLAB w/ 152x152-MW 18.7/MW 18.7 WWM ON POLY V.B., TYP.
EXISTING FLOR SLAB
125
GRAN 'A'
EXISTING 140 MASONRY FOUNDATION WALL + CONCRETE FOOTING
EXISTING BACKFILL; FIELD VERIFY CONDITION
EXISTING 240 MASONRY FOUNDATION WALL + CONCRETE FOOTING
UNDISTURBED SOIL

2 SECTION S201 SCALE: 1:20

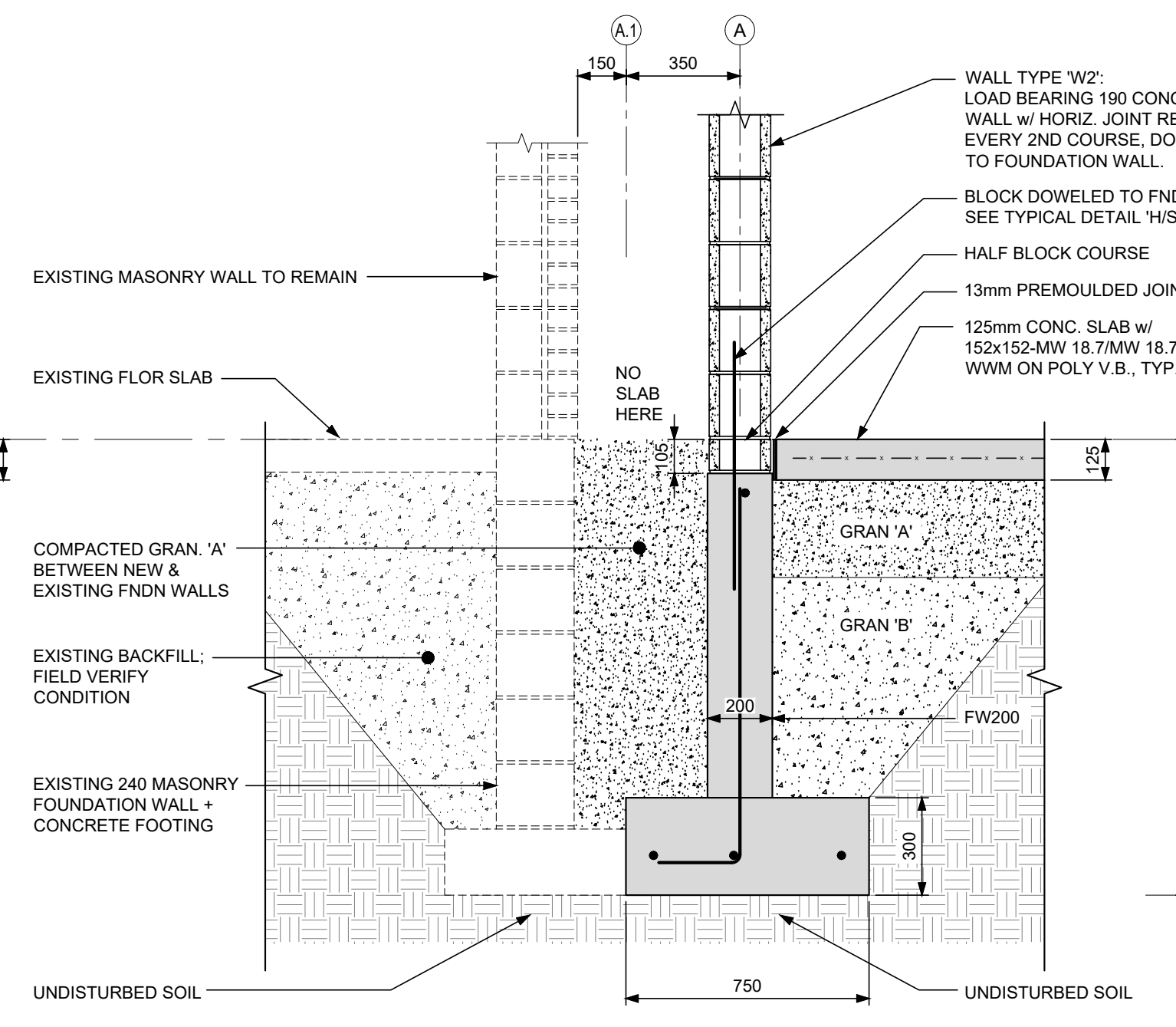

A.1
A
150
350
EXISTING MASONRY WALL TO REMAIN
EXISTING FLOR SLAB
NO SLAB HERE
105
WALL TYPE 'W2': LOAD BEARING 190 CONC. BLOCK WALL w/ HORIZ. JOINT REINF. EVERY 2ND COURSE, DOWELLED TO FOUNDATION WALL.
BLOCK DOWELED TO FNDN WALL; SEE TYPICAL DETAIL 'H/S300'.
HALF BLOCK COURSE
13mm PREMOULDED JOINT, TYP.
125mm CONC. SLAB w/ 152x152-MW 18.7/MW 18.7 WWM ON POLY V.B., TYP.
125
COMPACTED GRAN. 'A' BETWEEN NEW & EXISTING FNDN WALLS
GRAN 'A'
GRAN 'B'
EXISTING BACKFILL; FIELD VERIFY CONDITION
200
FW200
EXISTING 240 MASONRY FOUNDATION WALL + CONCRETE FOOTING
300
750
UNDISTURBED SOIL
UNDISTURBED SOIL

3 SECTION S201 SCALE: 1:20

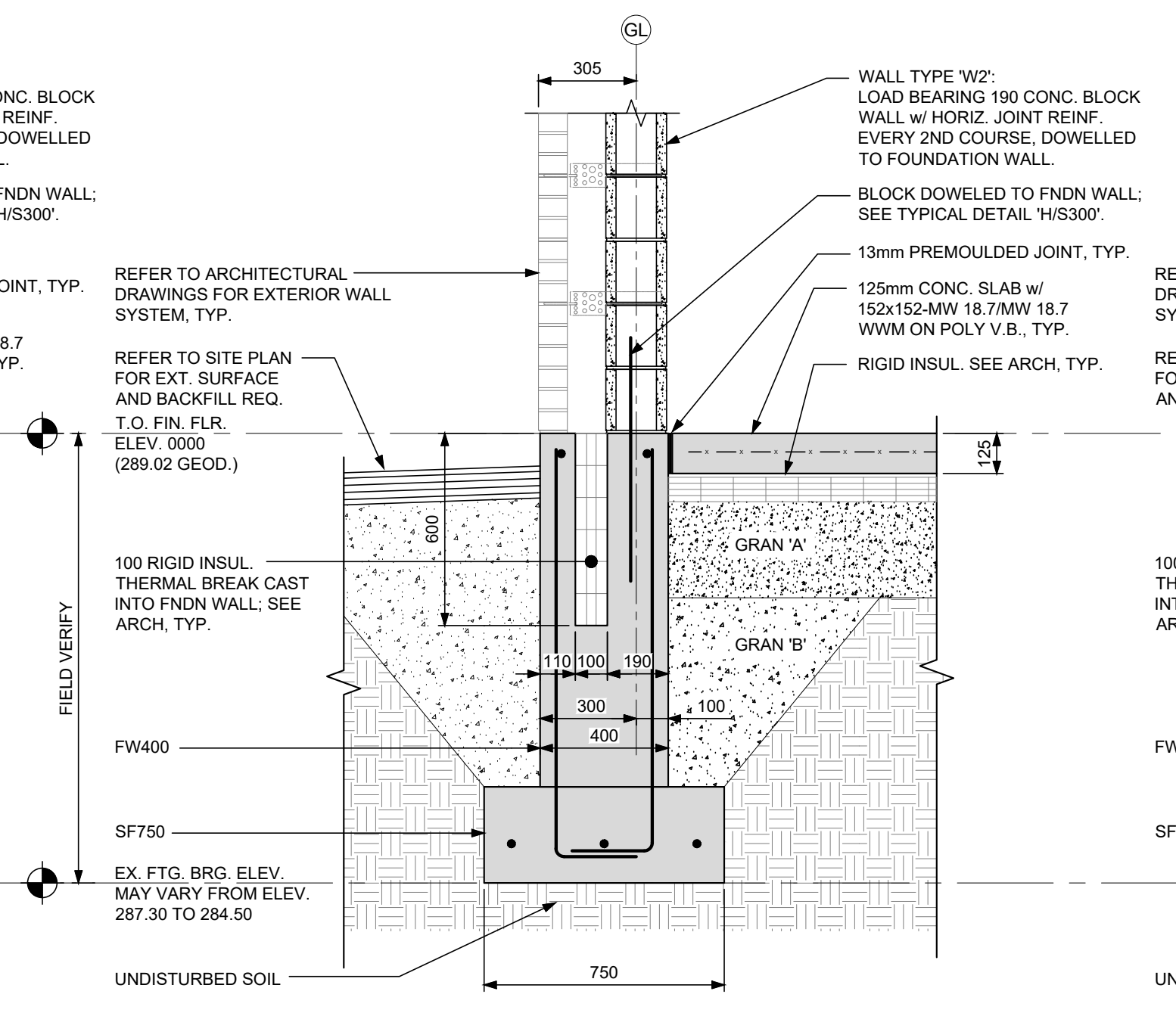

GL
305
WALL TYPE 'W2': LOAD BEARING 190 CONC. BLOCK WALL w/ HORIZ. JOINT REINF. EVERY 2ND COURSE, DOWELLED TO FOUNDATION WALL.
BLOCK DOWELED TO FNDN WALL; SEE TYPICAL DETAIL 'H/S300'.
13mm PREMOULDED JOINT, TYP.
125mm CONC. SLAB w/ 152x152-MW 18.7/MW 18.7 WWM ON POLY V.B., TYP.
RIGID INSUL. SEE ARCH, TYP.
REFER TO ARCHITECTURAL DRAWINGS FOR EXTERIOR WALL SYSTEM, TYP.
REFER TO SITE PLAN FOR EXT. SURFACE AND BACKFILL REQ.
T.O. FIN. FLR. ELEV. 0000 (289.02 GEOD.)
125
600
100 RIGID INSUL. THERMAL BREAK CAST INTO FNDN WALL; SEE ARCH, TYP.
GRAN 'A'
GRAN 'B'
FIELD VERIFY
110
100
190
300
400
100
FW400
SF750
EX. FTG. BRG. ELEV. MAY VARY FROM ELEV. 287.30 TO 284.50
UNDISTURBED SOIL
750

4A SECTION S201 SCALE: 1:20

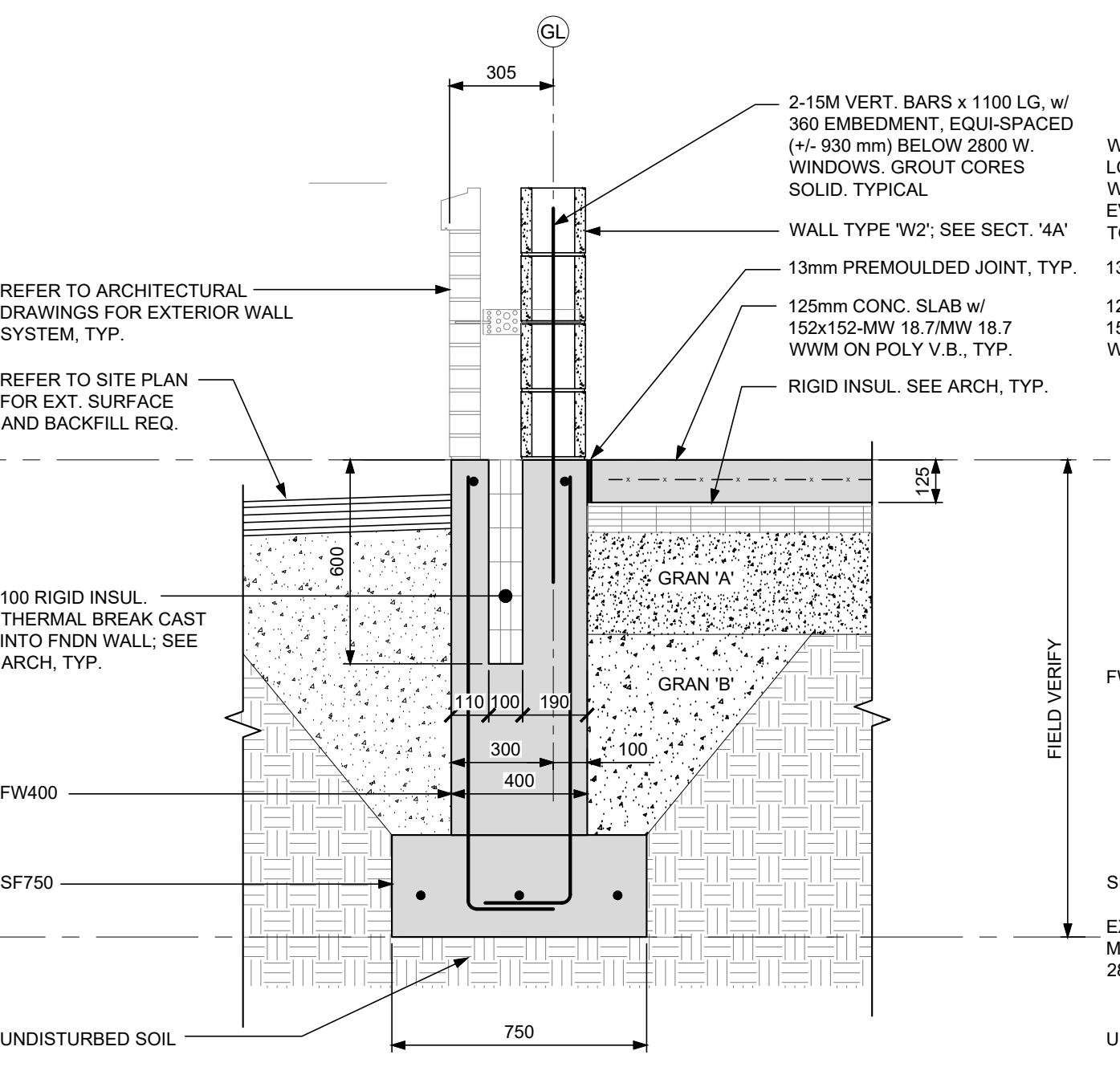

GL
305
2-15M VERT. BARS x 1100 LG, w/ 360 EMBEDMENT, EQUI-SPACED (+/- 930 mm) BELOW 2800 W. WINDOWS. GROUT CORES SOLID. TYPICAL
WALL TYPE 'W2'; SEE SECT. '4A'
13mm PREMOULDED JOINT, TYP.
125mm CONC. SLAB w/ 152x152-MW 18.7/MW 18.7 WWM ON POLY V.B., TYP.
RIGID INSUL. SEE ARCH, TYP.
REFER TO ARCHITECTURAL DRAWINGS FOR EXTERIOR WALL SYSTEM, TYP.
REFER TO SITE PLAN FOR EXT. SURFACE AND BACKFILL REQ.
125
600
100 RIGID INSUL. THERMAL BREAK CAST INTO FNDN WALL; SEE ARCH, TYP.
GRAN 'A'
GRAN 'B'
110
100
190
300
400
100
FW400
SF750
UNDISTURBED SOIL
750

4B SECTION S201 SCALE: 1:20

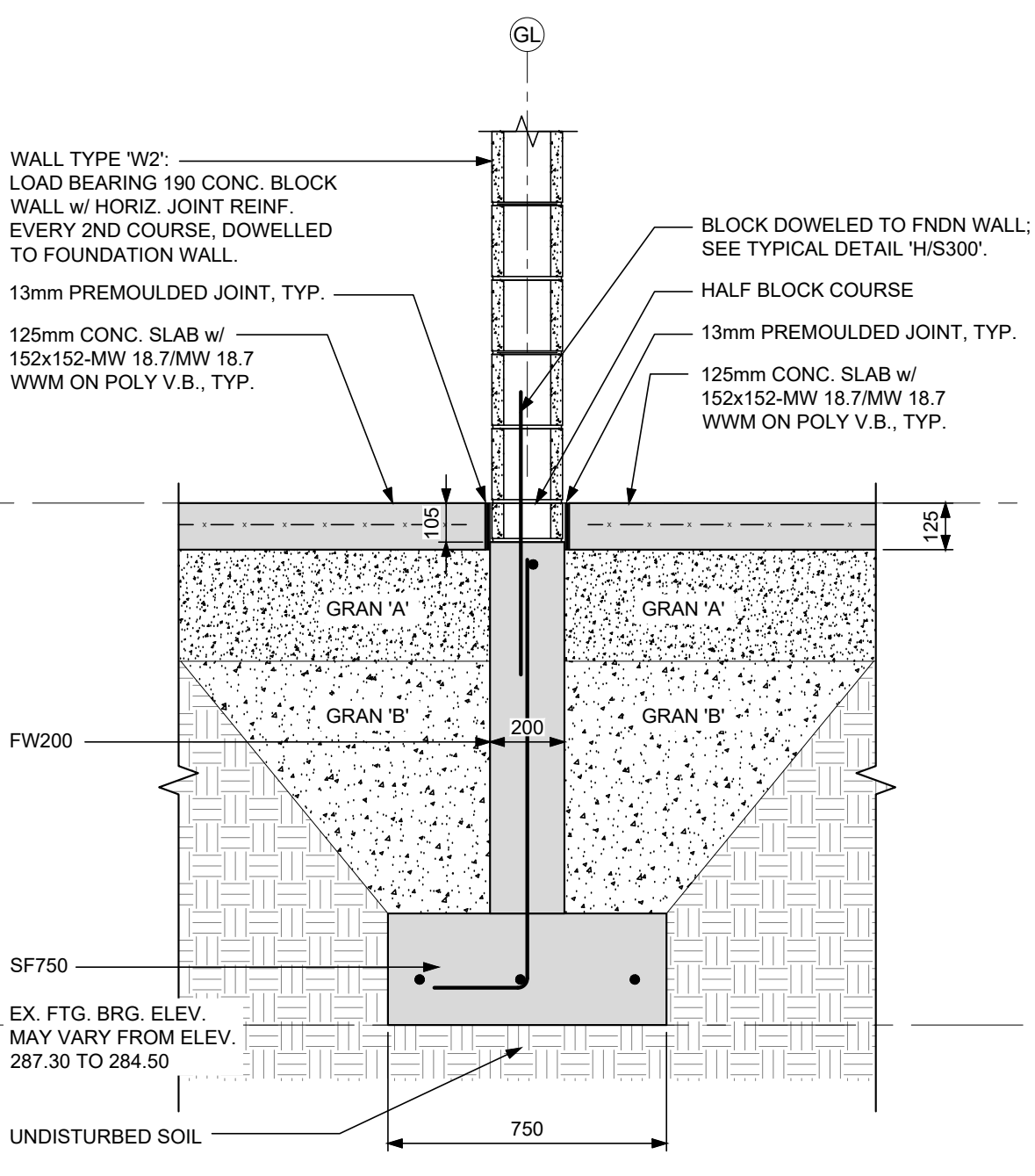

GL
FIELD VERIFY
WALL TYPE 'W2': LOAD BEARING 190 CONC. BLOCK WALL w/ HORIZ. JOINT REINF. EVERY 2ND COURSE, DOWELLED TO FOUNDATION WALL.
BLOCK DOWELED TO FNDN WALL; SEE TYPICAL DETAIL 'H/S300'.
HALF BLOCK COURSE
13mm PREMOULDED JOINT, TYP.
13mm PREMOULDED JOINT, TYP.
125mm CONC. SLAB w/ 152x152-MW 18.7/MW 18.7 WWM ON POLY V.B., TYP.
125mm CONC. SLAB w/ 152x152-MW 18.7/MW 18.7 WWM ON POLY V.B., TYP.
105
125
GRAN 'A'
GRAN 'B'
200
FW200
SF750
EX. FTG. BRG. ELEV. MAY VARY FROM ELEV. 287.30 TO 284.50
UNDISTURBED SOIL
750

5A SECTION S201 SCALE: 1:20

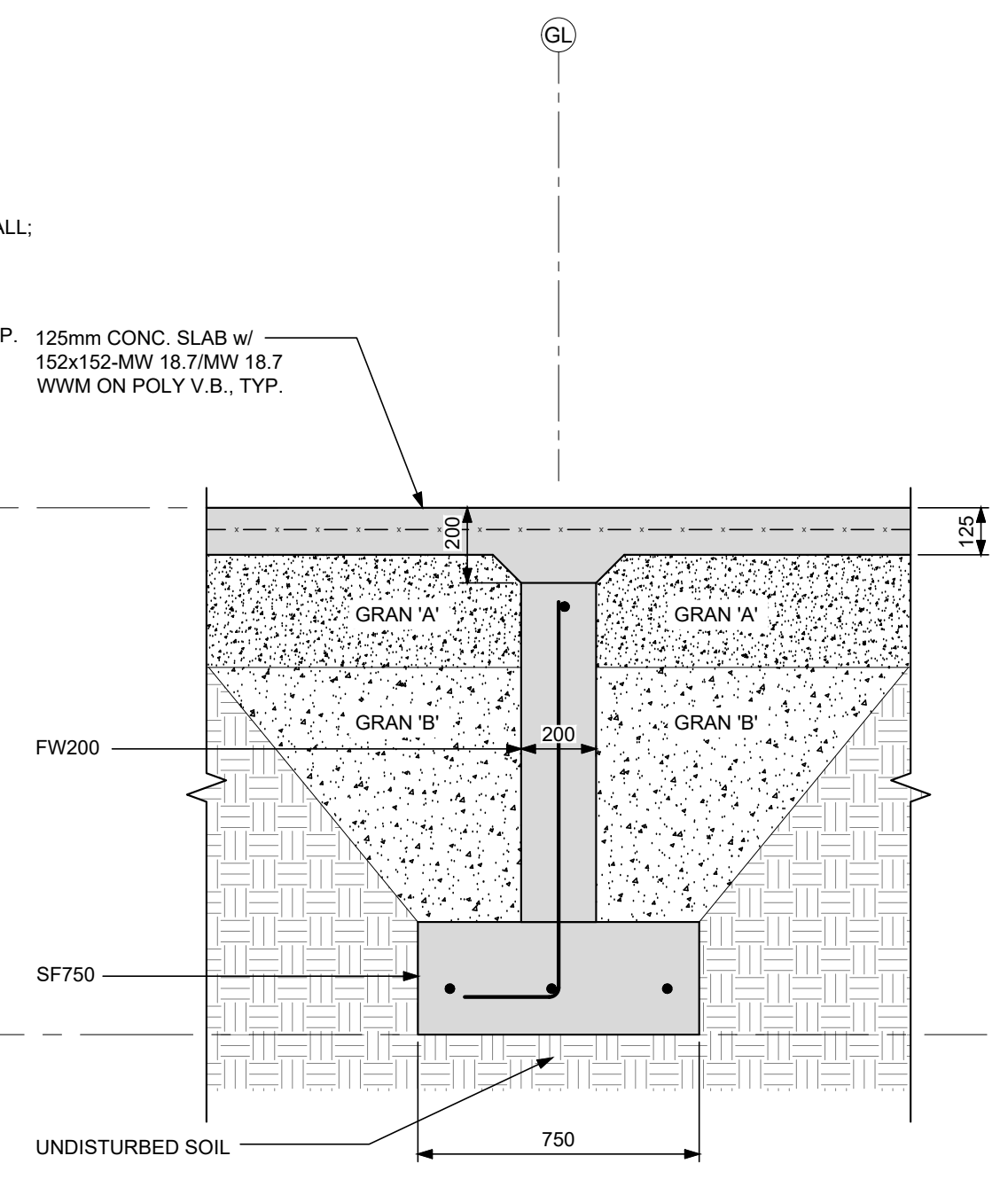

GL
125mm CONC. SLAB w/ 152x152-MW 18.7/MW 18.7 WWM ON POLY V.B., TYP.
200
125
GRAN 'A'
GRAN 'B'
200
FW200
SF750
UNDISTURBED SOIL
750

5B SECTION S201 SCALE: 1:20

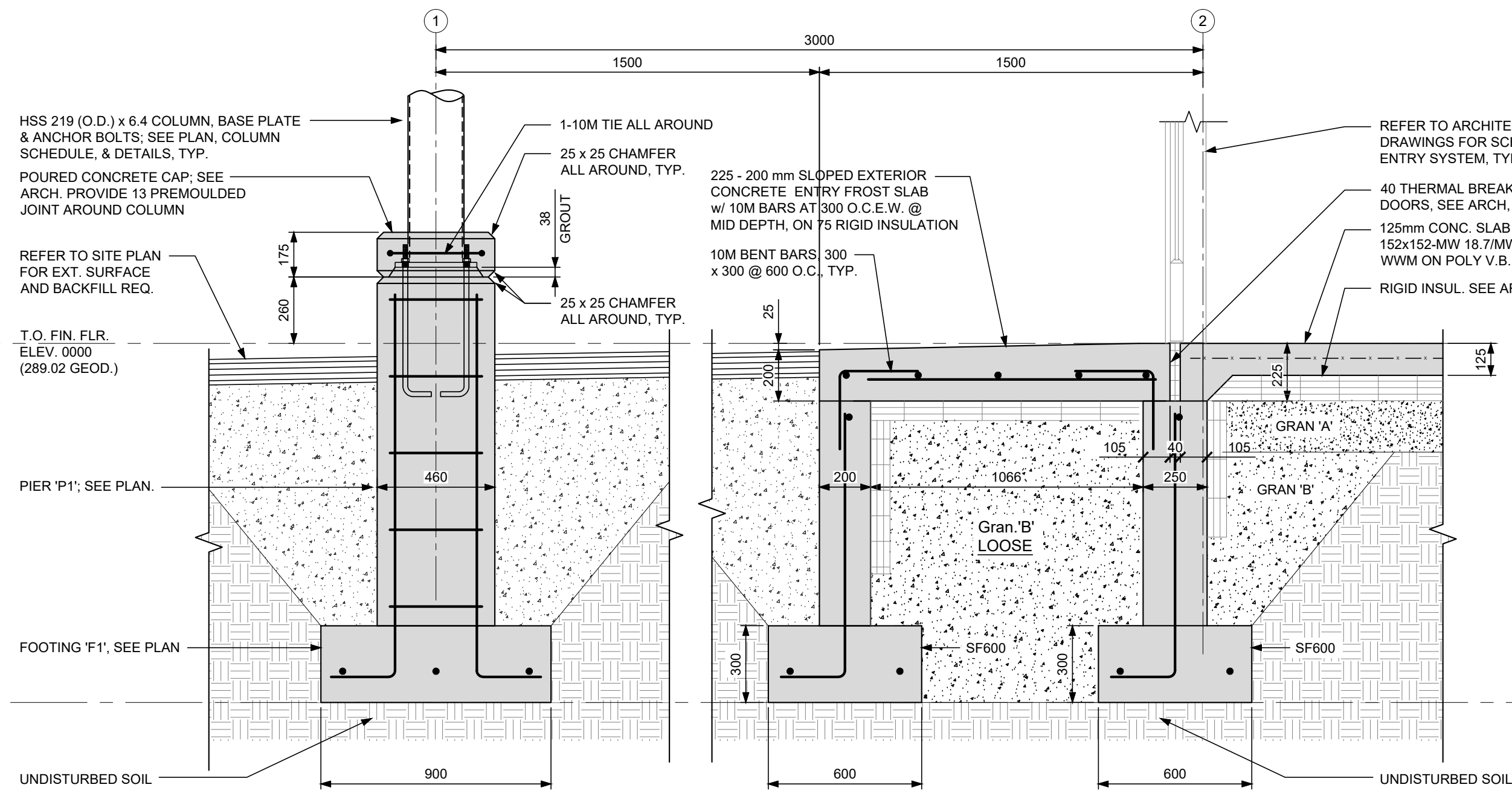

1
2
3000
1500
1500
HSS 219 (O.D.) x 6.4 COLUMN, BASE PLATE & ANCHOR BOLTS; SEE PLAN, COLUMN SCHEDULE, & DETAILS, TYP.
POURED CONCRETE CAP; SEE ARCH. PROVIDE 13 PREMOULDED JOINT AROUND COLUMN
1-10M TIE ALL AROUND
25 x 25 CHAMFER ALL AROUND, TYP.
38 GROUT
175
260
25 x 25 CHAMFER ALL AROUND, TYP.
REFER TO SITE PLAN FOR EXT. SURFACE AND BACKFILL REQ.
T.O. FIN. FLR. ELEV. 0000 (289.02 GEOD.)
225 - 200 mm SLOPED EXTERIOR CONCRETE ENTRY FROST SLAB w/ 10M BARS AT 300 O.C.E.W. @ MID DEPTH, ON 75 RIGID INSULATION
10M BENT BARS, 300 x 300 @ 600 O.C., TYP.
REFER TO ARCHITECTURAL DRAWINGS FOR SCHEDULED ENTRY SYSTEM, TYP.
40 THERMAL BREAK @ DOORS, SEE ARCH, TYP.
125mm CONC. SLAB w/ 152x152-MW 18.7/MW 18.7 WWM ON POLY V.B., TYP.
RIGID INSUL. SEE ARCH, TYP.
25
200
225
125
GRAN 'A'
GRAN 'B'
105
40
105
200
1066
250
Gran.'B' LOOSE
460
PIER 'P1'; SEE PLAN.
FOOTING 'F1', SEE PLAN
SF600
SF600
300
300
UNDISTURBED SOIL
UNDISTURBED SOIL
900
600
600

6 SECTION S201 SCALE: 1:20

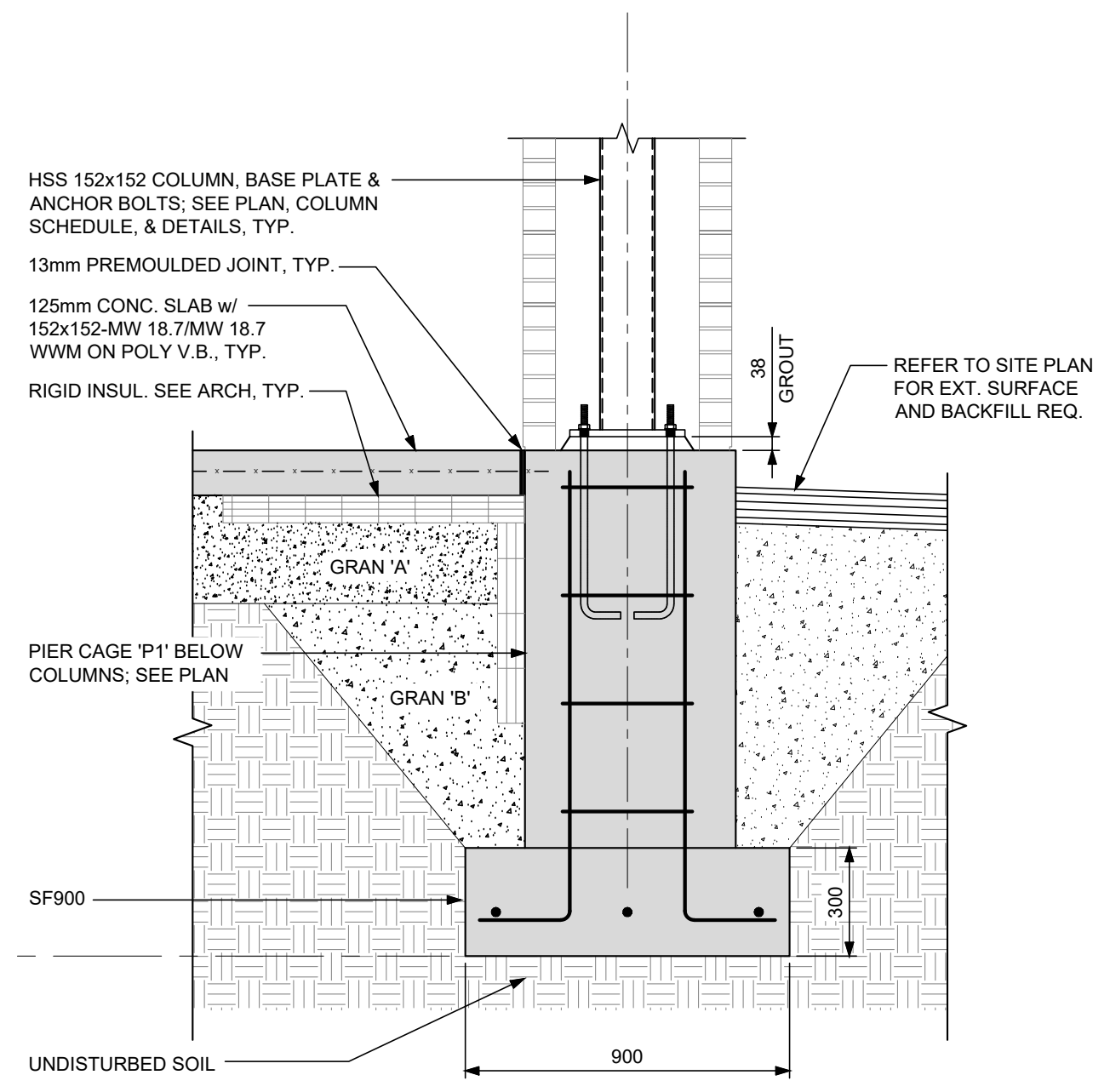

HSS 152x152 COLUMN, BASE PLATE & ANCHOR BOLTS; SEE PLAN, COLUMN SCHEDULE, & DETAILS, TYP.
13mm PREMOULDED JOINT, TYP.
125mm CONC. SLAB w/ 152x152-MW 18.7/MW 18.7 WWM ON POLY V.B., TYP.
RIGID INSUL. SEE ARCH, TYP.
38 GROUT
REFER TO SITE PLAN FOR EXT. SURFACE AND BACKFILL REQ.
GRAN 'A'
GRAN 'B'
PIER CAGE 'P1' BELOW COLUMNS; SEE PLAN
SF900
300
UNDISTURBED SOIL
900

7 SECTION S201 SCALE: 1:20

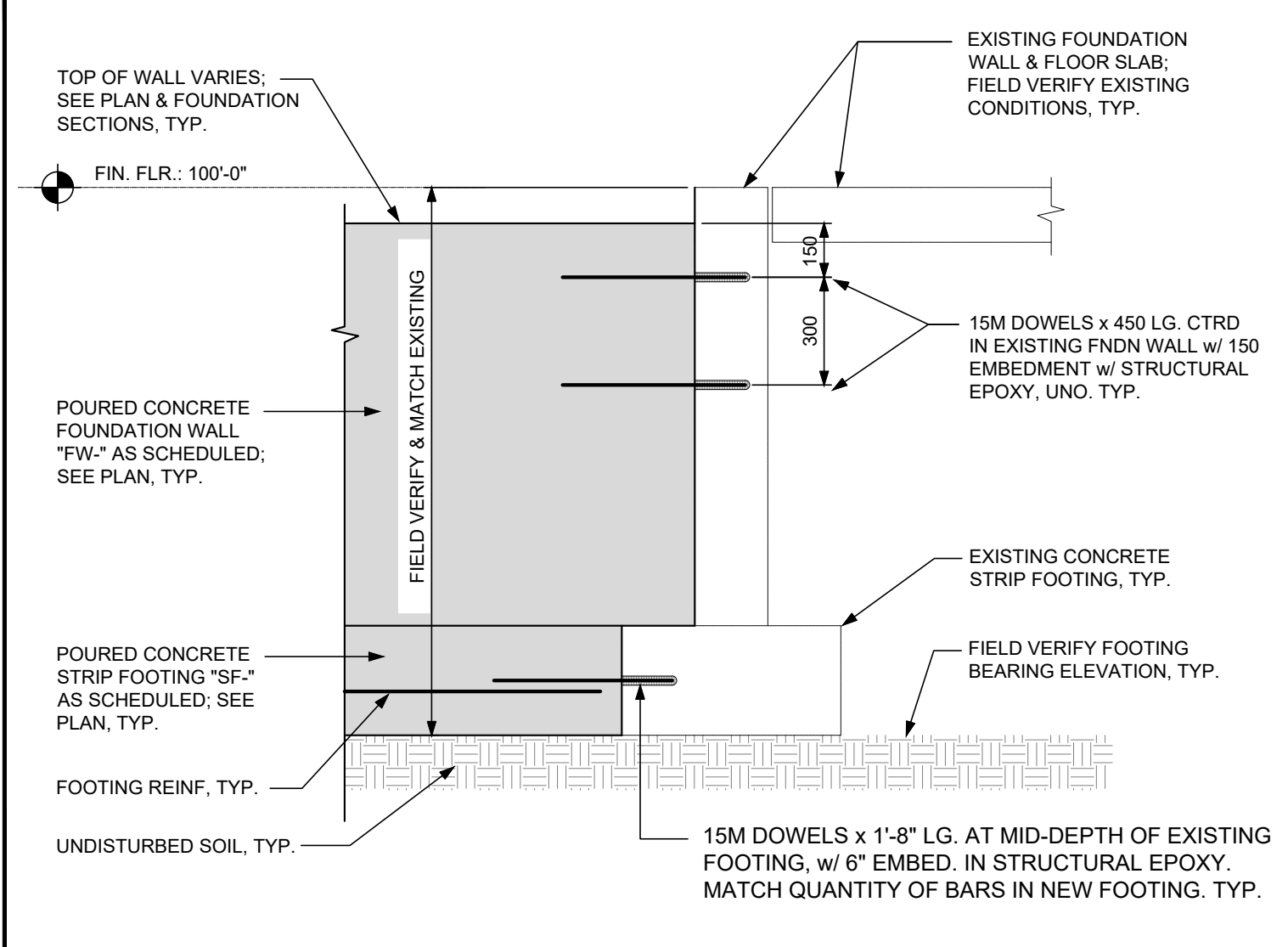

TOP OF WALL VARIES; SEE PLAN & FOUNDATION SECTIONS, TYP.
FIN. FLR.: 100'-0"
EXISTING FOUNDATION WALL & FLOOR SLAB; FIELD VERIFY EXISTING CONDITIONS, TYP.
150
300
15M DOWELS x 450 LG. CTRD IN EXISTING FNDN WALL w/ 150 EMBEDMENT w/ STRUCTURAL EPOXY, UNO. TYP.
FIELD VERIFY & MATCH EXISTING
POURED CONCRETE FOUNDATION WALL "FW-" AS SCHEDULED; SEE PLAN, TYP.
EXISTING CONCRETE STRIP FOOTING, TYP.
FIELD VERIFY FOOTING BEARING ELEVATION, TYP.
POURED CONCRETE STRIP FOOTING "SF-" AS SCHEDULED; SEE PLAN, TYP.
FOOTING REINF, TYP.
UNDISTURBED SOIL, TYP.
15M DOWELS x 1'-8" LG. AT MID-DEPTH OF EXISTING FOOTING, w/ 6" EMBED. IN STRUCTURAL EPOXY. MATCH QUANTITY OF BARS IN NEW FOOTING. TYP.

XF-1 S201 TYPICAL NEW FOUNDATION WALL / STRIP FOOTING TIE-IN DETAIL TO EXISTING FOUNDATION WALL (U.N.O.) SCALE: NTS

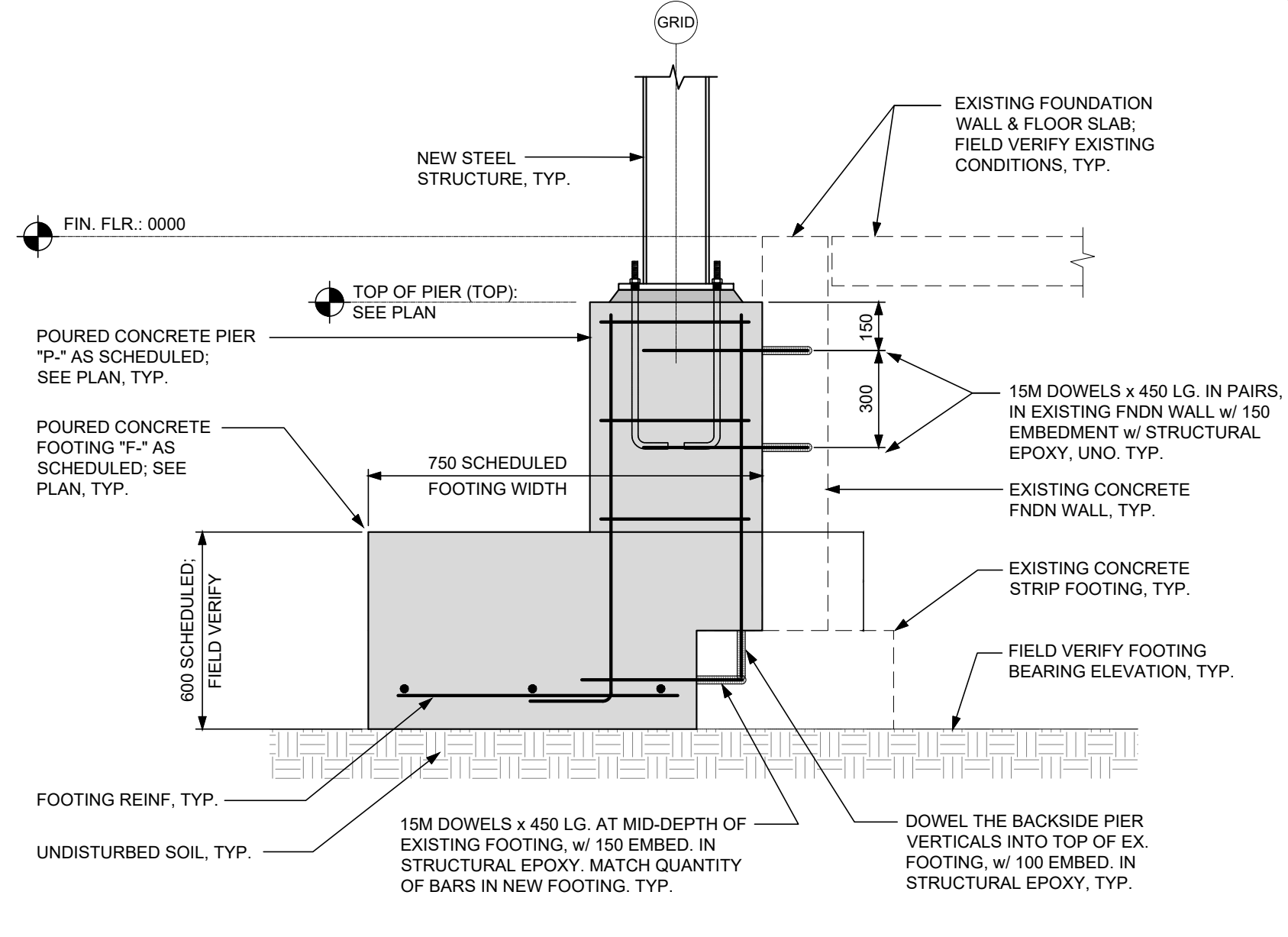

GRID
NEW STEEL STRUCTURE, TYP.
EXISTING FOUNDATION WALL & FLOOR SLAB; FIELD VERIFY EXISTING CONDITIONS, TYP.
FIN. FLR.: 0000
TOP OF PIER (TOP): SEE PLAN
POURED CONCRETE PIER "P-" AS SCHEDULED; SEE PLAN, TYP.
150
300
15M DOWELS x 450 LG. IN PAIRS, IN EXISTING FNDN WALL w/ 150 EMBEDMENT w/ STRUCTURAL EPOXY, UNO. TYP.
POURED CONCRETE FOOTING "F-" AS SCHEDULED; SEE PLAN, TYP.
750 SCHEDULED FOOTING WIDTH
EXISTING CONCRETE FNDN WALL, TYP.
EXISTING CONCRETE STRIP FOOTING, TYP.
600 SCHEDULED; FIELD VERIFY
FIELD VERIFY FOOTING BEARING ELEVATION, TYP.
FOOTING REINF, TYP.
UNDISTURBED SOIL, TYP.
15M DOWELS x 450 LG. AT MID-DEPTH OF EXISTING FOOTING, w/ 150 EMBED. IN STRUCTURAL EPOXY. MATCH QUANTITY OF BARS IN NEW FOOTING. TYP.
DOWEL THE BACKSIDE PIER VERTICALS INTO TOP OF EX. FOOTING, w/ 100 EMBED. IN STRUCTURAL EPOXY, TYP.

XF-2 S201 TYPICAL NEW PIER / FOOTING TIE-IN DETAIL TO EXISTING FOUNDATION WALL (U.N.O.) SCALE: NTS

NOTE:
ALL EXISTING FOUNDATION CONDITIONS MUST BE FIELD INSPECTED / MEASURED PRIOR TO ANY NEW FOUNDATION CONSTRUCTION

NOTE:
TIE NEW PIERS, FTG'S & WALLS INTO EXISTING; SEE DETAILS 'XF-1' & 'XF-2'. SEE PLAN FOR LOCATIONS.

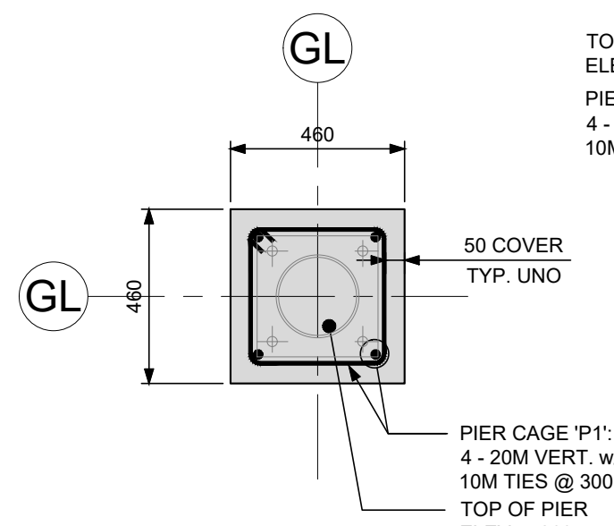

GL
GL
460
460
50 COVER TYP. UNO
PIER CAGE 'P1': 4 - 20M VERT. w/ 10M TIES @ 300 O.C.
TOP OF PIER ELEV. + 260

P1A S201 PIER TYPE 'P1A' SCALE: 1:20

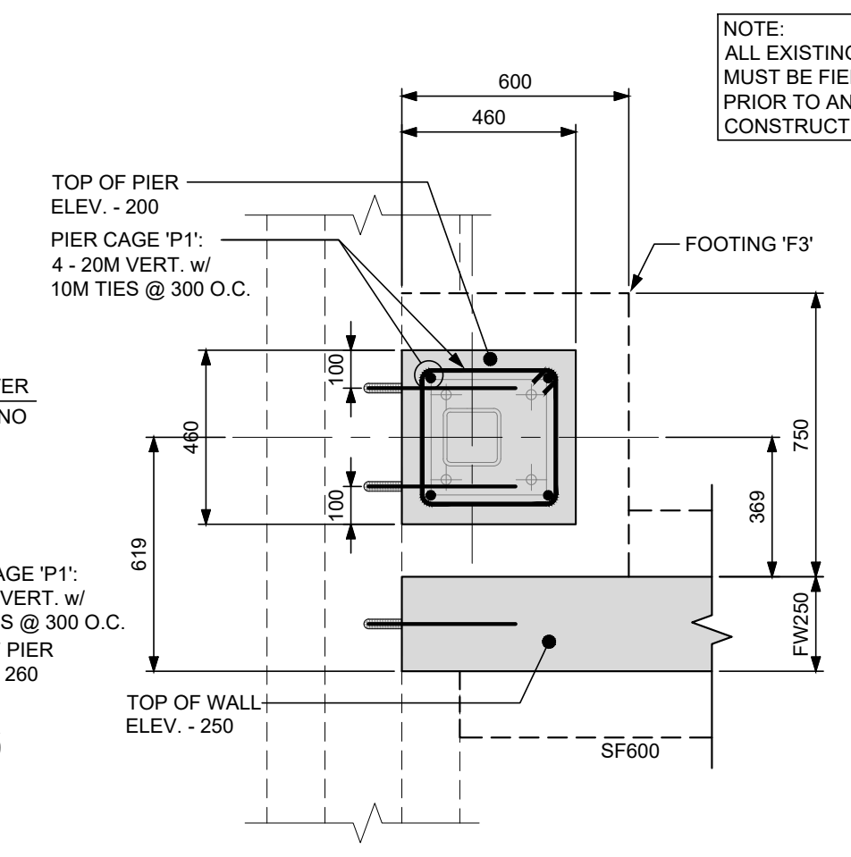

600
460
TOP OF PIER ELEV. - 200
PIER CAGE 'P1': 4 - 20M VERT. w/ 10M TIES @ 300 O.C.
FOOTING 'F3'
100
460
100
619
750
369
FW250
TOP OF WALL ELEV. - 250
SF600

P1B S201 PIER TYPE 'P1B' SCALE: 1:20

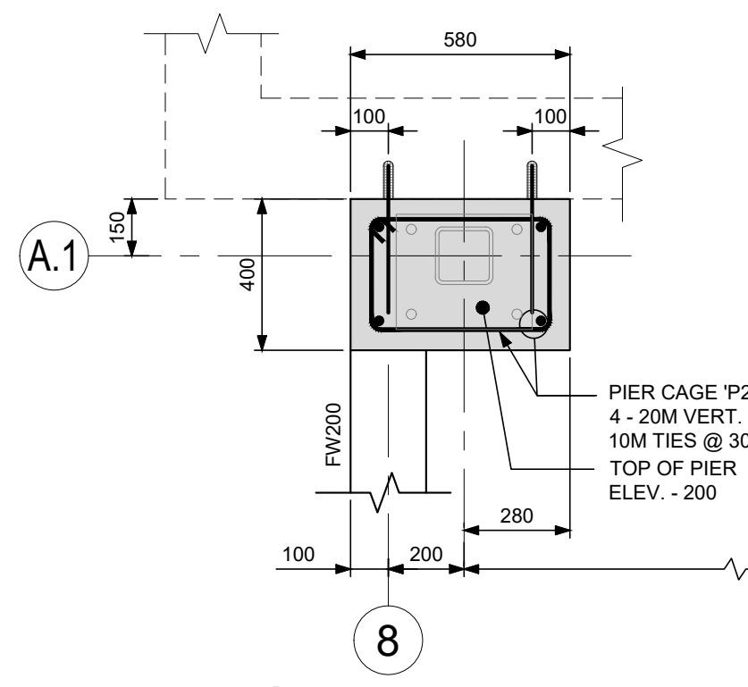

580
100
100
A.1
150
400
FW200
PIER CAGE 'P2': 4 - 20M VERT. w/ 10M TIES @ 300 O.C.
TOP OF PIER ELEV. - 200
280
100
200
6600
8

P2A S201 PIER TYPE 'P2A' SCALE: 1:20

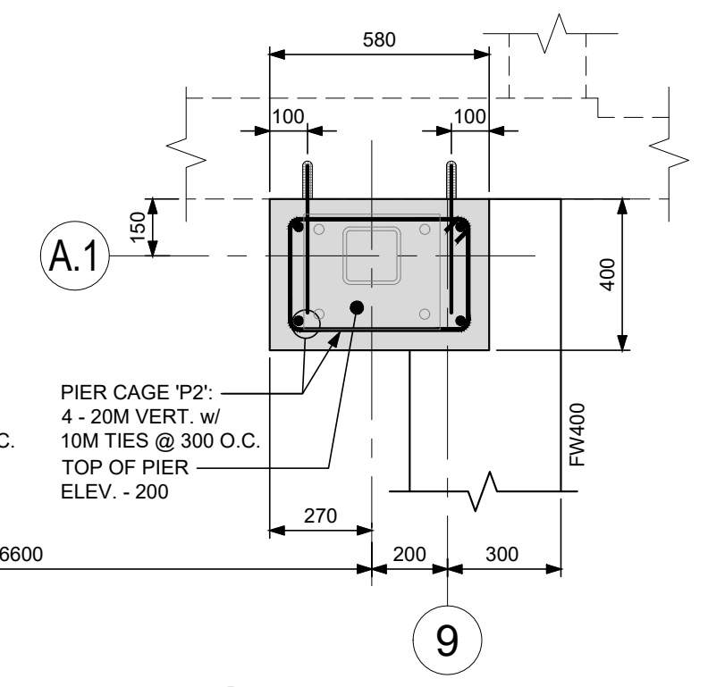

580
100
100
A.1
150
400
FW400
PIER CAGE 'P2': 4 - 20M VERT. w/ 10M TIES @ 300 O.C.
TOP OF PIER ELEV. - 200
270
200
300
9

P2B S201 PIER TYPE 'P2B' SCALE: 1:20

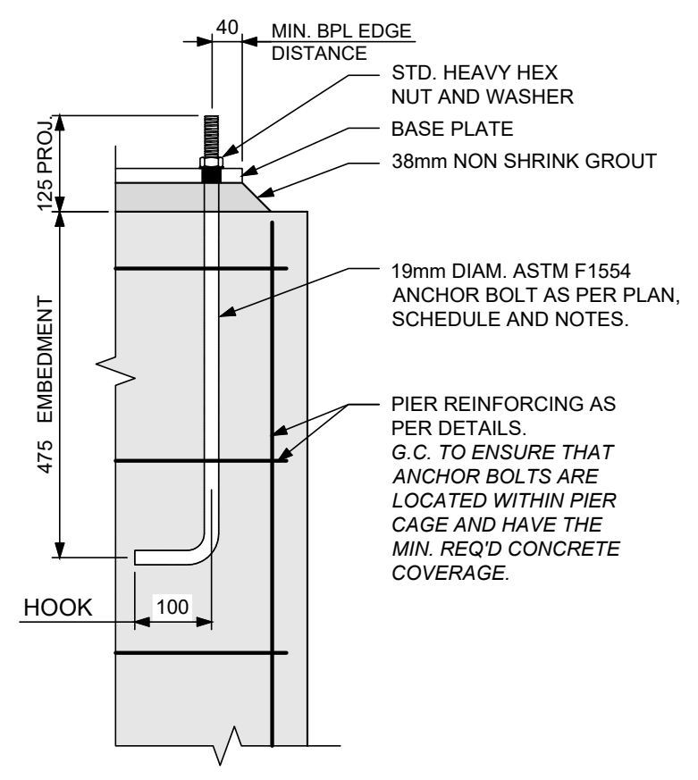

40
MIN. BPL EDGE DISTANCE
STD. HEAVY HEX NUT AND WASHER
BASE PLATE
38mm NON SHRINK GROUT
125 PROJ.
19mm DIAM. ASTM F1554 ANCHOR BOLT AS PER PLAN, SCHEDULE AND NOTES.
475 EMBEDMENT
PIER REINFORCING AS PER DETAILS.
G.C. TO ENSURE THAT ANCHOR BOLTS ARE LOCATED WITHIN PIER CAGE AND HAVE THE MIN. REQ'D CONCRETE COVERAGE.
HOOK
100

AB1 S200 TYPICAL ANCHOR BOLT DETAIL "AB1" SCALE: 1:10

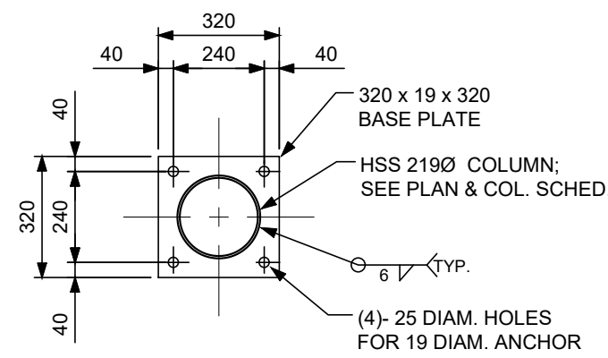

320
40
240
40
320 x 19 x 320 BASE PLATE
HSS 219Ø COLUMN; SEE PLAN & COL. SCHED.
6 TYP.
(4)- 25 DIAM. HOLES FOR 19 DIAM. ANCHOR BOLTS (AB1), TYP.
320
240
40
40

BPA S201 BASE PLATE 'BPA' SCALE: 1:20

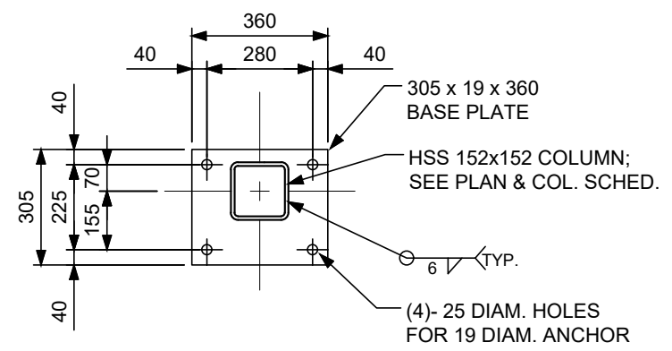

360
40
280
40
305 x 19 x 360 BASE PLATE
HSS 152x152 COLUMN; SEE PLAN & COL. SCHED.
6 TYP.
(4)- 25 DIAM. HOLES FOR 19 DIAM. ANCHOR BOLTS (AB1), TYP.
305
225
70
155
40
40

BPB S201 BASE PLATE 'BPB' SCALE: 1:20

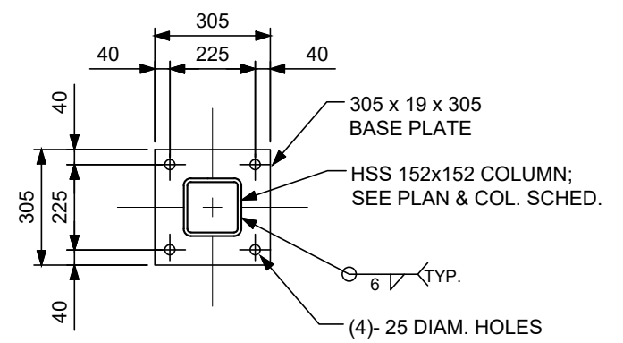

305
40
225
40
305 x 19 x 305 BASE PLATE
HSS 152x152 COLUMN; SEE PLAN & COL. SCHED.
6 TYP.
(4)- 25 DIAM. HOLES FOR 19 DIAM. ANCHOR BOLTS (AB1), TYP.
305
225
40
40

BPC S201 BASE PLATE 'BPC' SCALE: 1:20

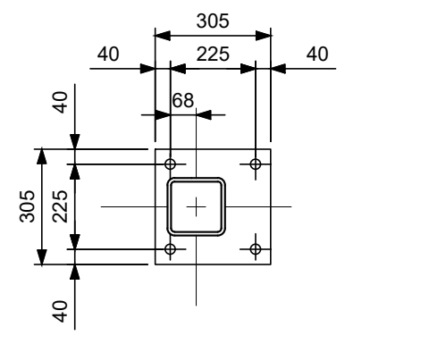

305
40
225
40
68
305
225
40
40

BPD S201 BASE PLATE 'BPD' SCALE: 1:20

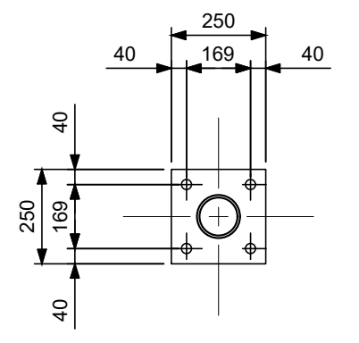

250
40
169
40
250
169
40
40

BPE S201 BASE PLATE 'BPE' SCALE: 1:20

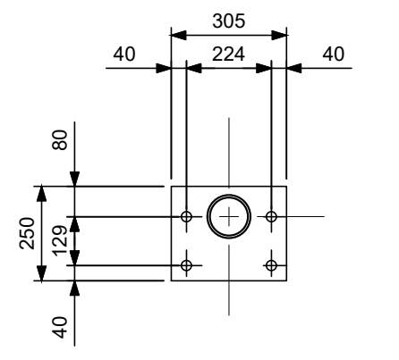

305
40
224
40
80
250
129
40

BPF S201 BASE PLATE 'BPF' SCALE: 1:20

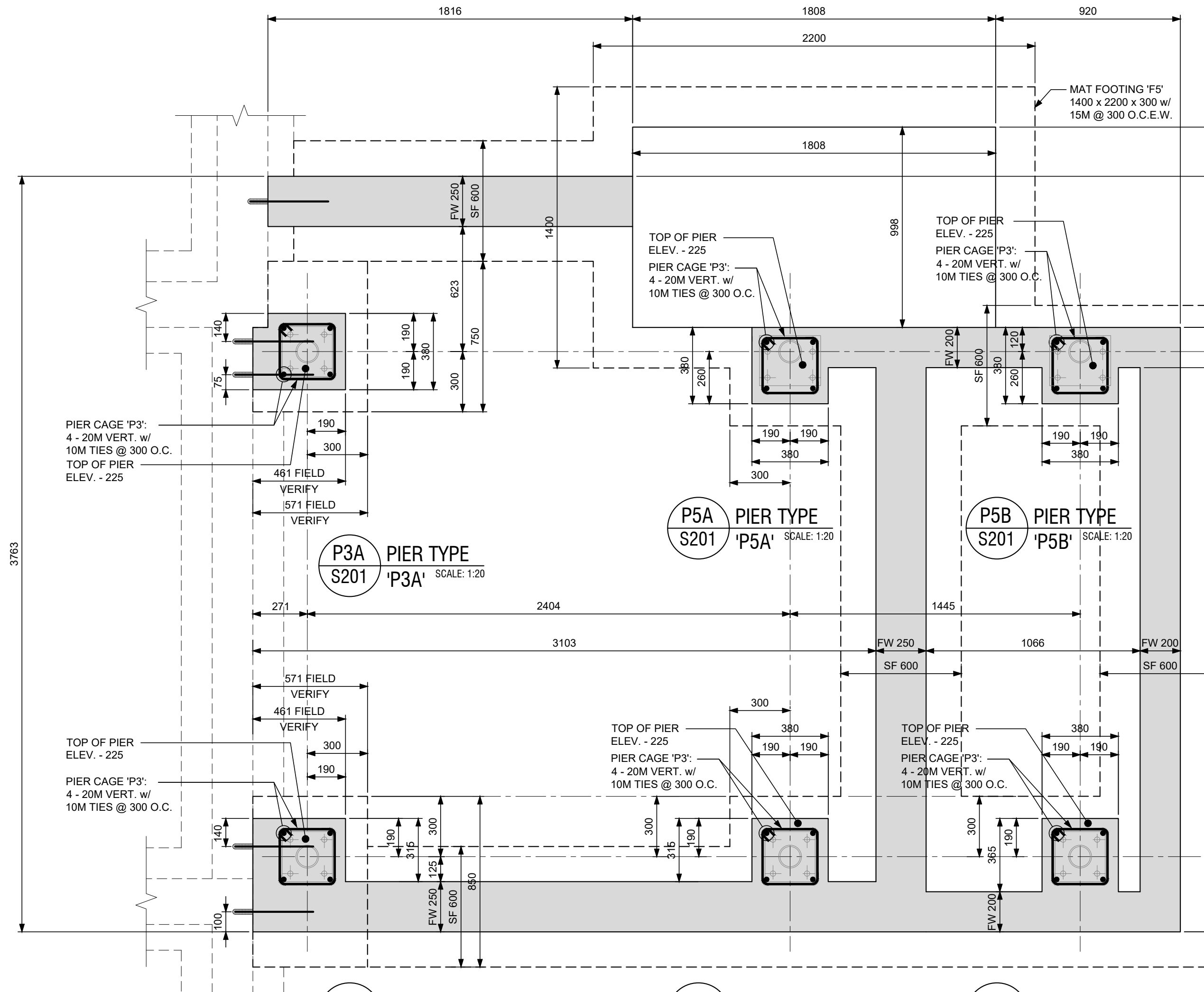

1816
1808
920
2200
MAT FOOTING 'F5' 1400 x 2200 x 300 w/ 15M @ 300 O.C.E.W.
1808
FW 250
SF 600
1400
998
753
623
750
300
140
75
190
190
380
TOP OF PIER ELEV. - 225
PIER CAGE 'P3': 4 - 20M VERT. w/ 10M TIES @ 300 O.C.
FW 200
SF 600
380
260
120
80
190
300
461 FIELD VERIFY
571 FIELD VERIFY
190
190
380
300
3763
271
2404
1445
3103
FW 250
SF 600
1066
FW 200
SF 600
2515
571 FIELD VERIFY
461 FIELD VERIFY
300
190
315
125
850
FW 250
SF 600
140
100
365
FW 200
375

P3A S201 PIER TYPE 'P3A' SCALE: 1:20

P5A S201 PIER TYPE 'P5A' SCALE: 1:20

P5B S201 PIER TYPE 'P5B' SCALE: 1:20

P4A S201 PIER TYPE 'P4A' SCALE: 1:20

P5C S201 PIER TYPE 'P5C' SCALE: 1:20

P5D S201 PIER TYPE 'P5D' SCALE: 1:20

MUNICIPAL APPROVAL STAMP

jptA

jp thomson architects ltd
2001 Provincial Rd, Unit 6A,
Windsor, Ontario, N8W 5V7
www.jpthomson.com
t 519-256-3131

SEAL:

May 15, 2026
P.A. ALEO
100104366

CONSULTANT:

ALEO ASSOCIATES INC.
CONSULTING ENGINEERS
325 DEVONSHIRE RD., WINDSOR, ONTARIO, CANADA N8Y 2L3
TELEPHONE (519) 254-7926 FACSIMILE (519) 254-0895

CONSULTANT SEAL:

DRAWING INFO:

A DETAIL NO.
B LOCATION SHEET
C DETAILED ON

COPYRIGHT:

ISSUANCES:

No.	Issued for/Description	Date
1.	80% OWNER REVIEW	2025-08-11
2.	PERMIT	2025-11-28
3.	PERMIT RE-ISSUE	2026-03-02
4.	TENDER	2026-04-09
5.	PERMIT RE-ISSUE	2026-05-15

CLIENT:

Waterloo Catholic District School Board
480 Dutton Drive,
Waterloo, ON N2L 4C6

PROJECT TITLE:

St. Gregory Catholic Elementary School Addition and Renovations

34 Osborne St.
Cambridge, ON
N1S 3H1

DRAWING TITLE:

FOUNDATION SECTIONS, DETAILS

DATE: 2026-03-02
DRAWN BY: SAS
SCALE: AS NOTED
PROJECT NO: **25-106**
ALEO PROJECT NO: **8983**
DRAWING NO: **S-201**

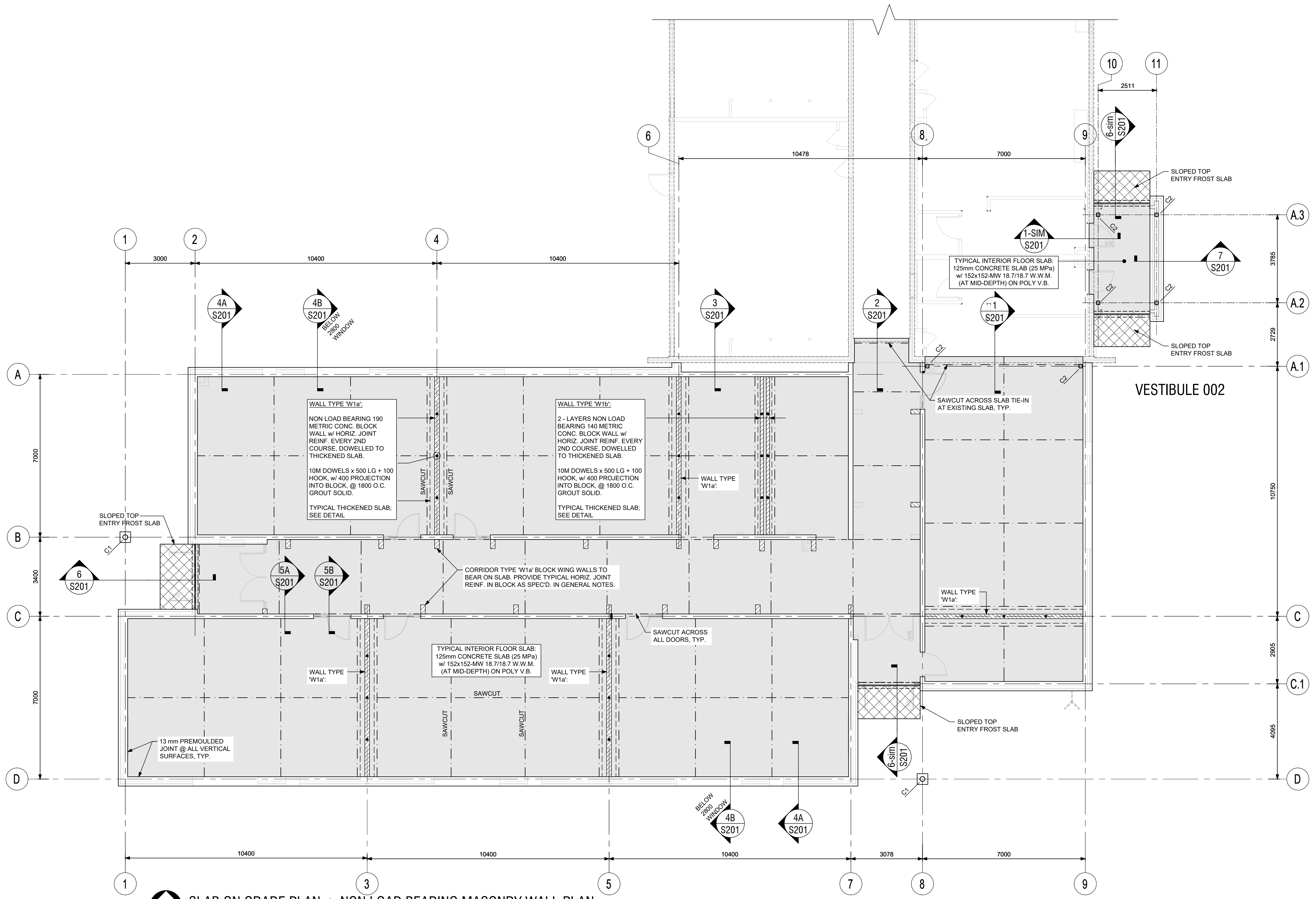
VESTIBULE 002
WALL TYPE 'W1a':
NON LOAD BEARING 190 METRIC CONC. BLOCK WALL w/ HORIZ. JOINT REINF. EVERY 2ND COURSE, DOWELLED TO THICKENED SLAB.
10M DOWELS x 500 LG + 100 HOOK, w/ 400 PROJECTION INTO BLOCK, @ 1800 O.C. GROUT SOLID.
TYPICAL THICKENED SLAB; SEE DETAIL
WALL TYPE 'W1b':
2 - LAYERS NON LOAD BEARING 140 METRIC CONC. BLOCK WALL w/ HORIZ. JOINT REINF. EVERY 2ND COURSE, DOWELLED TO THICKENED SLAB.
TYPICAL INTERIOR FLOOR SLAB: 125mm CONCRETE SLAB (25 MPa) w/ 152x152-MW 18.7/18.7 W.W.M. (AT MID-DEPTH) ON POLY V.B.
CORRIDOR TYPE 'W1a' BLOCK WING WALLS TO BEAR ON SLAB. PROVIDE TYPICAL HORIZ. JOINT REINF. IN BLOCK AS SPEC'D. IN GENERAL NOTES.
SAWCUT ACROSS SLAB TIE-IN AT EXISTING SLAB, TYP.
SAWCUT ACROSS ALL DOORS, TYP.
SLOPED TOP ENTRY FROST SLAB
13 mm PREMOULDED JOINT @ ALL VERTICAL SURFACES, TYP.
SAWCUT
3000
10400
10478
7000
2511
3078
1
2
3
4
5
6
7
8
9
10
11
A
A.1
A.2
A.3
B
C
C.1
D

SLAB ON GRADE PLAN + NON LOAD BEARING MASONRY WALL PLAN
SCALE: 1:100

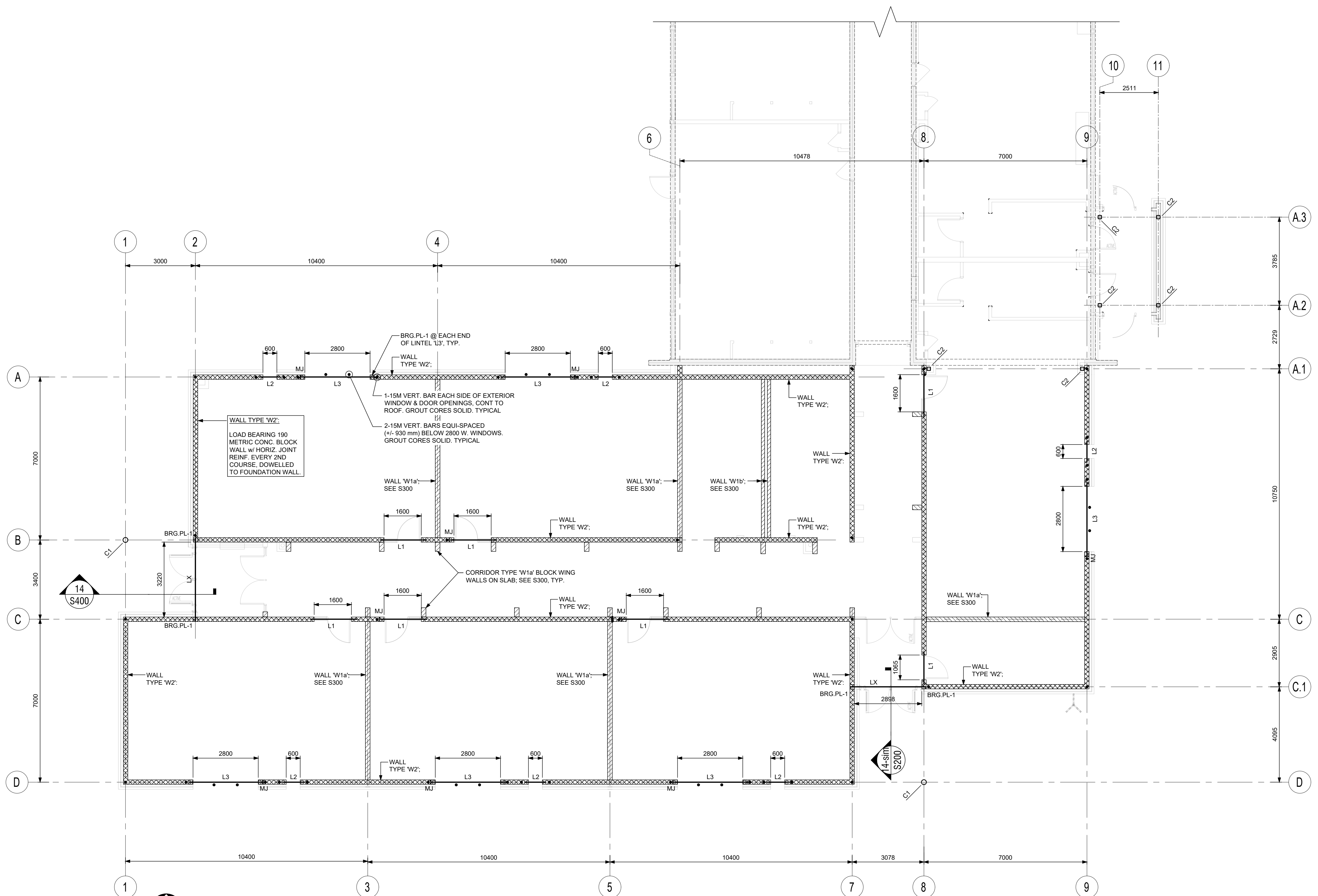
WALL TYPE 'W2':
LOAD BEARING 190 METRIC CONC. BLOCK WALL w/ HORIZ. JOINT REINF. EVERY 2ND COURSE, DOWELLED TO FOUNDATION WALL.
BRG.PL-1 @ EACH END OF LINTEL 'L3', TYP.
1-15M VERT. BAR EACH SIDE OF EXTERIOR WINDOW & DOOR OPENINGS. CONT TO ROOF. GROUT CORES SOLID. TYPICAL
2-15M VERT. BARS EQUI-SPACED (+/- 930 mm) BELOW 2800 W. WINDOWS. GROUT CORES SOLID. TYPICAL
CORRIDOR TYPE 'W1a' BLOCK WING WALLS ON SLAB; SEE S300, TYP.
WALL 'W1a'; SEE S300
WALL 'W1b'; SEE S300
WALL TYPE 'W2'
BRG.PL-1
L1
L2
L3
LK
MJ
2800
1600
600
2898
14
S400

LOAD BEARING MASONRY WALL & LINTEL PLAN
SCALE: 1:100

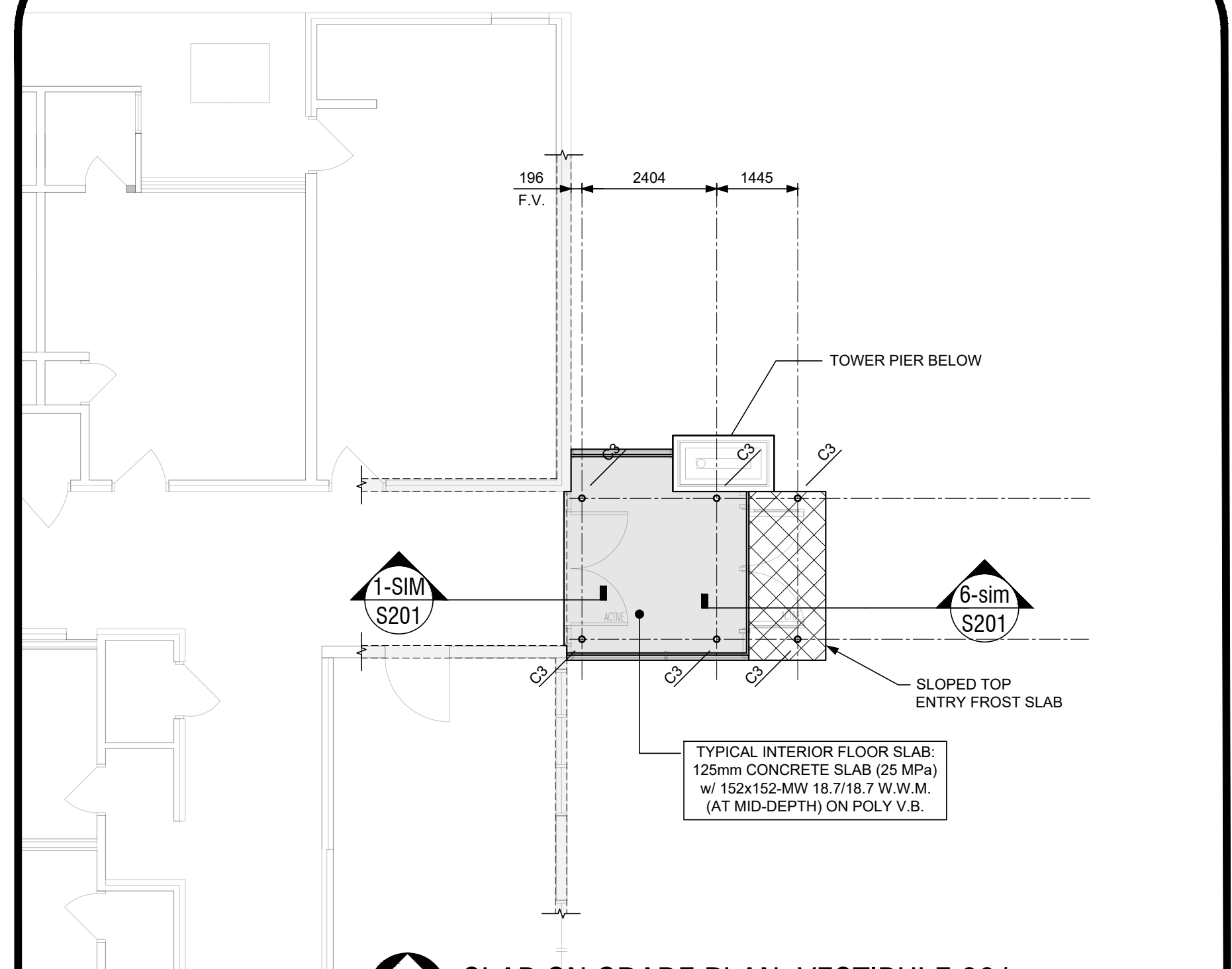
TOWER PIER BELOW
SLOPED TOP ENTRY FROST SLAB
TYPICAL INTERIOR FLOOR SLAB: 125mm CONCRETE SLAB (25 MPa) w/ 152x152-MW 18.7/18.7 W.W.M. (AT MID-DEPTH) ON POLY V.B.
196 F.V.
2404
1445
1-SIM S201
6-SIM S201

SLAB ON GRADE PLAN; VESTIBULE 001
SCALE: 1:100

FLOOR SLAB-ON-GRADE NOTES:

1A. INTERIOR SLAB CONSTRUCTION:
125 mm CONCRETE SLAB (25 MPa)
W/ 152x152-18.7/18.7 W.W.M. (AT MID-DEPTH) ON
POLY VAPOUR BARRIER ON
300 mm GRANULAR 'A' COMPACTED TO 100% SPMDD ON
GRANULAR 'B' TYPE 1 AS REQ'D COMPACTED TO 98% SPMDD ON
PROOF ROLLED AND APPROVED SUB-GRADE. SEE NOTE #2 BELOW.

1B. EXTERIOR ENTRY FROST SLAB CONSTRUCTION:
225-200 CONCRETE SLAB (32-MPa w/ AIR ENTRAINMENT)
w/ 152x152-18.7/18.7 W.W.M. AT MID-DEPTH ON
50 mm RIGID HI-LOAD 40 INSULATION ON
300 mm GRANULAR 'A' COMPACTED TO 100% SPMDD ON
GRANULAR 'B' TYPE 1 AS REQ'D COMPACTED TO 98% SPMDD ON
PROOF ROLLED AND APPROVED SUB-GRADE. SEE NOTE #2 BELOW.

2. FLOOR SLAB GRANULAR 'B' TYPE 1 SUB-BASE SHALL BE FOUNDED ON SILTY CLAY, OR SANDY SILTY CLAY.

ACCORDING TO THE GEOTECHNICAL REPORT PREPARED BY CHUNG & VANDER DOELEN ENGINEERING LTD. REPORT NO. 2536 DATED JULY 2, 2025, THE BOREHOLE DATA INDICATES THAT THE SILTY CLAY, OR SANDY SILTY CLAY ELEVATIONS VARY FROM HIGHEST AT 000.0 ft TO LOWEST AT 000.0 ft.

FIN. FLR	XXXX
SLAB	XXXX
GRAN 'A'	XXXX
HIGHEST GEO ELEV.	XXXX
LOWEST GEO ELEV.	XXXX
MIN. DEPTH OF GRAN 'B'	XXXX
MAX. DEPTH OF GRAN 'B'	XXXX

THESE GRANULAR 'B' SUB BASE VALUES ARE THEORETICAL VALUES BASED ON THE REPORT. NO PROVISIONS HAVE BEEN INCLUDED FOR THE CONTRACTORS MEANS OR METHODS. THE CONTRACTOR SHALL MAKE ALLOWANCES FOR PRACTICAL QUANTITIES ASSUMING EXCAVATION BELOW TO THE THEORETICAL PLANE BETWEEN SOIL TYPES.

3. ELEVATION OF ALL FINISHED FLOOR SLABS-ON-GRADE = 0000 mm TYP.

4. W.W.M. MUST BE SUPPORTED BY CHAIRS OR APPROVED MEANS AT 760 mm O.C. E.W. TO ENSURE IT IS PROPERLY HELD IN-PLACE DURING THE POUR.

5. PROVIDE 13 mm THICK PREMOULDED JOINT FILLER AGAINST INTERIOR FOUNDATION WALLS AND ALL OTHER VERTICAL SURFACES.

6. MAINTAIN THE SPECIFIED SLAB THICKNESS AT ALL FLOOR DEPRESSIONS.

7. SAW-CUTTING SHALL BE COMPLETED WITHIN 8 TO 16 HOURS OF PLACING THE CONCRETE.

8. PROVIDE SAWCUTS AS PER TYPICAL DETAILS, AND AT THE LOCATIONS SHOWN ON PLAN.

9. PROTECT SLAB-ON-GRADE AND BASE AGAINST FREEZING AND FROST ACTION AS REQUIRED AT ALL TIMES DURING CONSTRUCTION.

10. DRAWING LEGEND:

——— SAWCUT

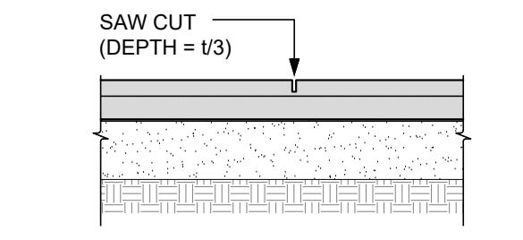
SAW CUT (DEPTH = t/3)

1. W.W.M. MUST BE SUPPORTED BY CHAIRS AT 760 mm O.C.E.W. TO ENSURE IT IS PROPERLY HELD IN-PLACE DURING THE CONCRETE POUR.
2. SAW-CUTTING SHALL BE COMPLETED WITHIN 8 TO 16 HOUR OF PLACING CONCRETE.
3. DO NOT CUT THROUGH W.W.M.
4. PROVIDE SAWCUTS AT ALL DOOR OPENINGS (EXCEPT PARTITIONS); ONE SAWCUT AT EACH SIDE OF WALL.
5. MAXIMUM SPACING OF SAWCUTS IN FEET SHALL BE APPROXIMATELY 25 TIMES THE THICKNESS OF THE SLAB IN FEET *UNLESS OTHERWISE STATED OR SHOWN ON THE DRAWINGS*.

F/S300 TYPICAL SLAB SAW CUT DETAIL
SCALE: NTS

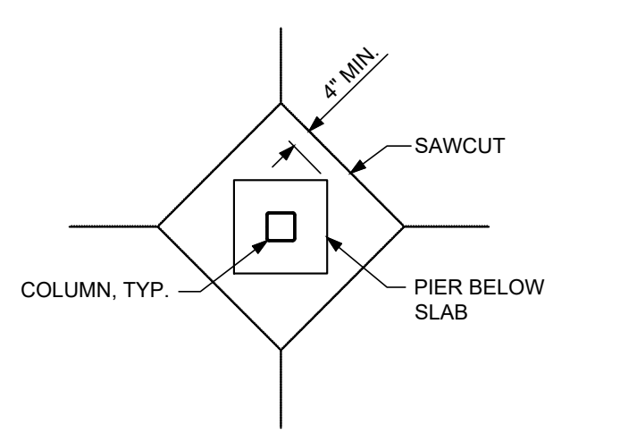
4" MIN.
SAWCUT
COLUMN, TYP.
PIER BELOW SLAB

G/S300 TYPICAL COLUMN SAWCUT DETAIL
SCALE: NTS

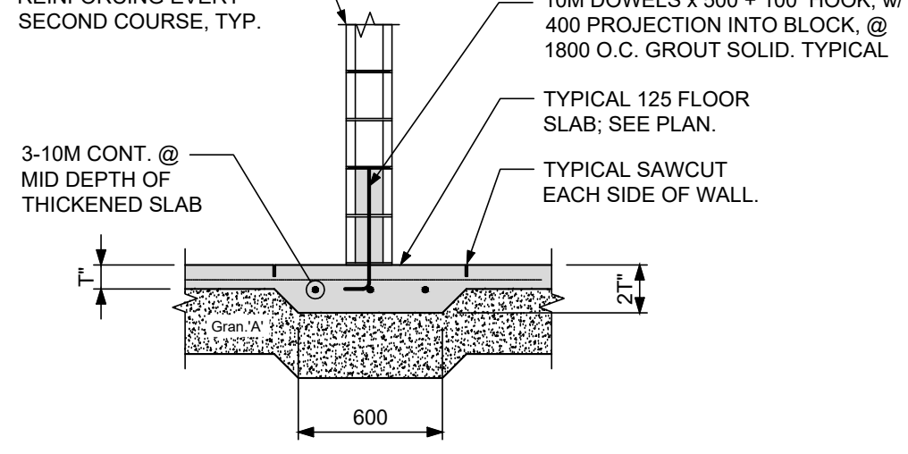
190 NON LOAD BEARING CONCRETE BLOCK w/ HORIZONTAL JOINT REINFORCING EVERY SECOND COURSE, TYP.
10M DOWELS x 500 + 100 HOOK, w/ 400 PROJECTION INTO BLOCK, @ 1800 O.C. GROUT SOLID. TYPICAL
TYPICAL 125 FLOOR SLAB; SEE PLAN.
3-10M CONT. @ MID DEPTH OF THICKENED SLAB
TYPICAL SAWCUT EACH SIDE OF WALL.
T"
2T"
Gran.'A'
600

H/S300 TYPICAL THICKENED SLAB DETAIL
(AT NON-LOAD-BEARING MASONRY WALLS)
SCALE: NTS

MASONRY WALL NOTES:

1. PROVIDE STD. 9-GA. HOT-DIP GALV. LADDER-TYPE HORIZONTAL JOINT REINFORCEMENT AT EVERY 400 mm O.C. VERTICALLY (BLOK-LOK 'BL-10' OR APPROVED EQUAL) AT ALL NON-LOAD BEARING WALLS, TYP.
2. PROVIDE HEAVY DUTY (5 mm DIA. SIDE ROD) HOT-DIP GALV. LADDER-TYPE HORIZONTAL JOINT REINFORCEMENT AT EVERY 400 mm O.C. VERTICALLY (BLOK-LOK 'BL-10' OR APPROVED EQUAL) AT ALL LOAD BEARING WALLS, TYP.
3. USE PREFABRICATED HEAVY DUTY HOT-DIP GALV. HORIZONTAL JOINT REINFORCEMENT CORNERS AND TEES AT ALL ELEVATOR AND STAIRWELL WALL CORNERS AND INTERSECTIONS, RESPECTIVELY U.N.O. (BLOCK-LOK 'BL-10' OR APPROVED EQUAL).
4. CONSTRUCT WALL MOVEMENT JOINTS IN CONCRETE BLOCK WALLS AT ALL LOCATIONS INDICATED BY M.J. ON WALL REINFORCEMENT PLAN:
   AT 7.6 m MAX SPACING FOR EXTERIOR WALLS, OR WHERE SHOWN ON PLAN.
   AT 9.0 m MAX SPACING FOR INTERIOR WALLS, OR WHERE SHOWN ON PLAN.
5. PROVIDE VERTICAL REINFORCEMENT CENTRED IN GROUTED MASONRY CORE ON EACH SIDE OF ALL EXTERIOR WALL OPENINGS, ON EACH SIDE OF ALL EXTERIOR WALL MOVEMENT JOINTS (UNO), AT ALL EXTERIOR CORNERS, AT ALL EXTERIOR WALL INTERSECTIONS AND AT ALL LOCATIONS INDICATED ON THE WALL REINFORCEMENT PLANS, WHERE NOTED.
6. VERTICAL WALL REINFORCEMENT SHALL BE CONTINUOUS THROUGH BOND BEAMS & LINTEL BLOCKS.
7. OFFSET WALL MOVEMENT JOINT IN CONCRETE BLOCK TO END OF LINTEL ABOVE ALL WINDOWS AND DOORS.
8. WHERE REINFORCEMENT ADJACENT TO WALL OPENINGS IS REQUIRED, IT SHALL BE PLACED 300 mm (2ND BLOCK CORE) AWAY FROM OPENING SO THAT IT'S CONTINUOUS PAST THE LINTEL WHERE 200 mm LINTEL BEARING IS SPECIFIED U.N.O. WHERE 400 mm LINTEL BEARING IS SPECIFIED, THE FIRST THREE MASONRY CORES AWAY FROM THE OPENING SHALL BE REINFORCED WITH THE 3RD CORE REINFORCEMENT BEING CONTINUOUS PAST THE LINTEL.
9. ALL BLOCK MOVEMENT JOINTS SHALL BE WHERE SHOWN ON PLAN, TYPICAL.
10. GROUT ALL BEAM POCKETS SOLID, TYP.
11. LEGEND:

▨	LOAD BEARING CONCRETE BLOCK WALLS; REFER TO MASONRY WALL NOTES & PLANS FOR REINFORCING.
▨	NON LOAD BEARING CONCRETE BLOCK WALLS; REFER TO MASONRY WALL NOTES & PLANS FOR REINFORCING.
●	INDICATES ADDITIONAL VERT. BAR WALL REINFORCEMENT IN GROUT FILLED MASONRY CORES (NOT ALL TYPICAL BARS SHOWN)
M.J.	WALL MOVEMENT JOINT

LINTEL NOTES:

1. ALL LINTELS, BEARING PLATES ETC. SHALL BE INSTALLED BY THE MASONRY CONTRACTOR, TYP.
2. THE GENERAL CONTRACTOR SHALL COORDINATE WITH THE ARCHITECTURAL DRAWINGS FOR ALL QUANTITIES, ELEVATIONS, BOTTOM PLATE SIZES, TYP.
3. ALL ANGLES TO BE LONG LEG VERTICAL U.N.O.
4. GRIND WELD JOINT CONNECTING L's SMOOTH PRIOR TO PAINT PRIMING.
5. ALL LINTELS TO HAVE 200 mm BEARING ON MASONRY, U.N.O.
6. ALL LINTELS TO BEAR ON SOLID COURSING (TWO COURSES GROUTED SOLID) WHERE BEARING PLATES ARE NOT REQUIRED U.N.O.
7. BEARING PLATES ARE REQUIRED AT ALL W-SHAPED & HSS LINTELS BEARING ON BLOCK U.N.O.; REFER TO PLAN & BEARING PLATE SCHEDULE.
8. ALL W-SHAPE AND HSS LINTELS W/ BEARING PLATES TO BE WELDED FOR A MINIMUM LENGTH OF 4" EACH SIDE OF PLATE, TYP. U.N.O.
9. BOTTOM PLATES SHALL TERMINATE 12 mm SHORT OF LINTEL BEARING TYP. U.N.O.
10. PROVIDE 15M VERT. BARS WELDED TO TOP OF W-SHAPE & HSS LINTELS AT 600 mm O.C. AT ALL CONCRETE BLOCK WALLS ABOVE LINTEL. BARS ARE TO BE CENTERED IN GROUTED BLOCK CORES. LENGTH OF BARS TO SUIT NUMBER OF BLOCK COURSES, TO A MAX LENGTH OF 600 mm.
11. IF A BOTTOM PLATE IS SPECIFIED FOR A LINTEL, THE PLATE SHALL BE ONLY AT THE MASONY OPENING, TYP.
12. PROVIDE MASONRY LINTELS PER SCHEDULE PROVIDED IN STRUCTURAL STEEL NOTES ON SHEET S100 FOR HVAC/PLUMBING/ELEC. PENETRATIONS NOT INDICATED ON THE STRUCTURAL FRAMING PLANS. THE GENERAL CONTRACTOR SHALL COORDINATE ALL QUANTITIES & DIMENSIONAL INFO WITH THE ARCH. DRAWINGS, TYP.

BEARING PLATE SCHEDULE

NO.	PLATE SIZE	ANCHORS	USAGE
BRG. PL-1	PL. 10 x 175 x 200	(1) 15M x 400 LG.	'W' BEAMS
BRG. PL-1	PL. 10 x 175 x 175	(1) 15M x 400 LG.	'W' LINTELS

BEARING PLATE NOTES:
1. REFER TO MASONRY WALL & LINTEL NOTES FOR ADDITIONAL INFO, TYP.
2. GROUT MASONRY CORES BELOW PLATES 800 mm WIDE x 600 mm DEEP (4 CORES WIDE x 3 COURSES DEEP) U.N.O., TYP.
3. SET PLATES 12 mm MIN. FROM FACE OF CONC./BLOCK BEARING WALL, TYP.
4. CENTRE PLATES ON BEARING WALL U.N.O., TYP.
5. BEAMS TO BE CENTRED ON PLATES U.N.O., TYP.
6. BEAMS TO HAVE 125 mm BEARING ON PLATES U.N.O., TYP.
7. PROVIDE 100 mm LONG MIN. WELDS EACH SIDE OF BEAM TO PLATE U.N.O., TYP.
8. GROUT BEAM POCKETS SOLID w/ GROUT U.N.O., TYP.
9. BEARING PLATE ANCHORS SHALL BE WELDED BAR TYPE w/ STD. HOOK, TYP.

LINTEL SCHEDULE

NO.	DESCRIPTION	SHAPE
L1	2 - L 90 x 90 x 10	⊥
L2	2 - L 90 x 90 x 10 + 10 x 390 BTM. PL	⊥
L3	W200x36 + 10 x 390 BTM. PL + TOP FLANGE VERT. BARS + 6 mm GUSSETS @ 600 O.C.	⊥

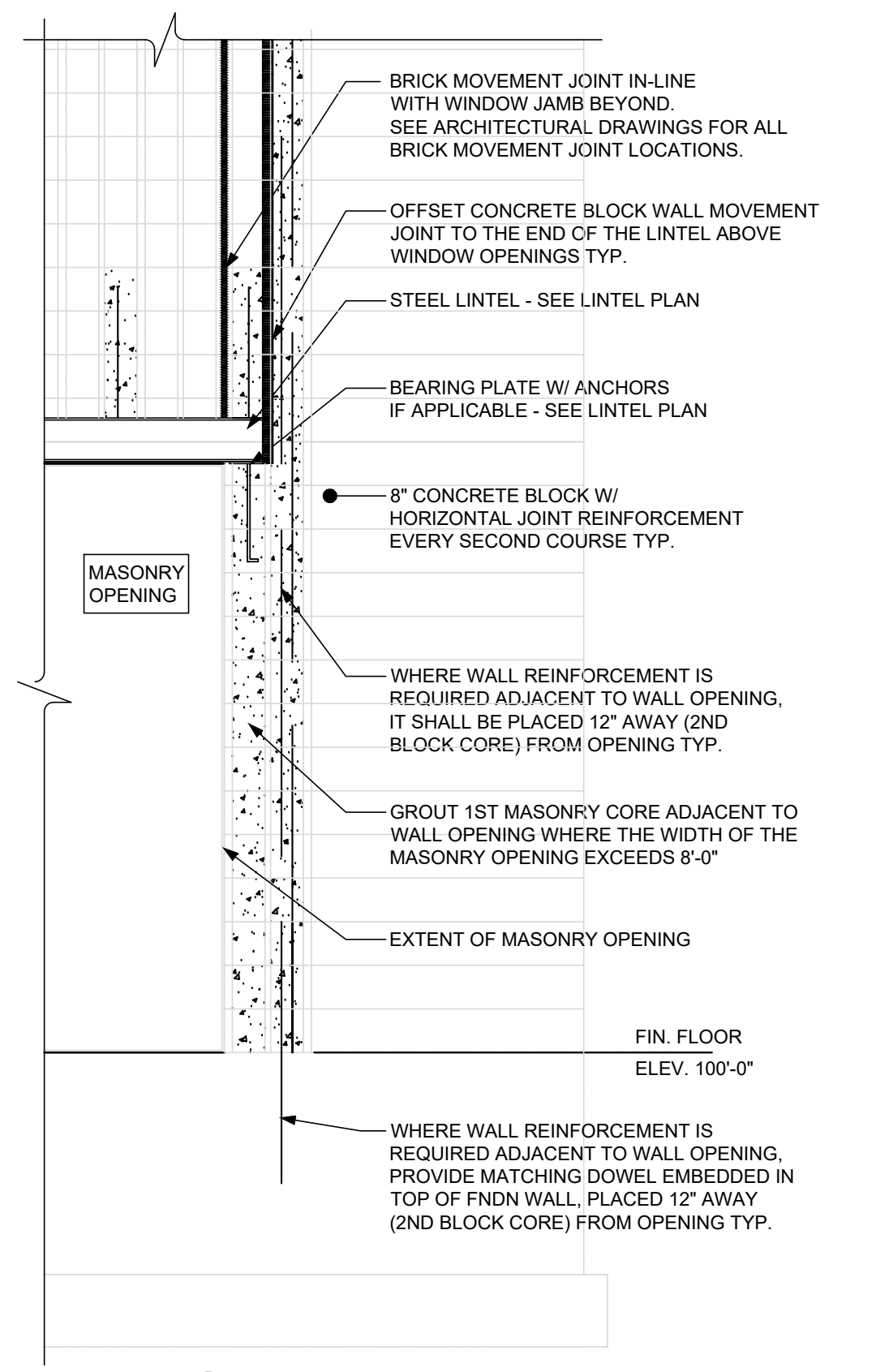
BRICK MOVEMENT JOINT IN-LINE WITH WINDOW JAMB BEYOND. SEE ARCHITECTURAL DRAWINGS FOR ALL BRICK MOVEMENT JOINT LOCATIONS.
OFFSET CONCRETE BLOCK WALL MOVEMENT JOINT TO THE END OF THE LINTEL ABOVE WINDOW OPENINGS TYP.
STEEL LINTEL - SEE LINTEL PLAN
BEARING PLATE W/ ANCHORS IF APPLICABLE - SEE LINTEL PLAN
8" CONCRETE BLOCK W/ HORIZONTAL JOINT REINFORCEMENT EVERY SECOND COURSE TYP.
MASONRY OPENING
WHERE WALL REINFORCEMENT IS REQUIRED ADJACENT TO WALL OPENING, IT SHALL BE PLACED 12" AWAY (2ND BLOCK CORE) FROM OPENING TYP.
GROUT 1ST MASONRY CORE ADJACENT TO WALL OPENING WHERE THE WIDTH OF THE MASONRY OPENING EXCEEDS 8'-0"
EXTENT OF MASONRY OPENING
FIN. FLOOR ELEV. 100'-0"
WHERE WALL REINFORCEMENT IS REQUIRED ADJACENT TO WALL OPENING, PROVIDE MATCHING DOWEL EMBEDDED IN TOP OF FNDN WALL, PLACED 12" AWAY (2ND BLOCK CORE) FROM OPENING TYP.

J/S300 TYPICAL MASONRY OPENING REINF. DETAIL
SCALE: NTS

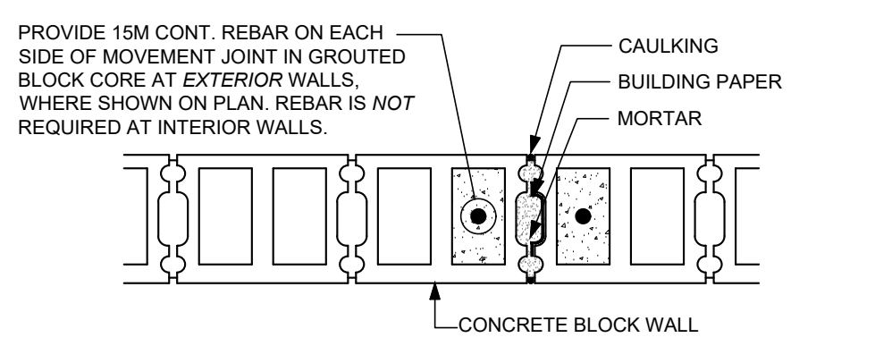
PROVIDE 15M CONT. REBAR ON EACH SIDE OF MOVEMENT JOINT IN GROUTED BLOCK CORE AT *EXTERIOR* WALLS, WHERE SHOWN ON PLAN. REBAR IS *NOT* REQUIRED AT INTERIOR WALLS.
CAULKING
BUILDING PAPER
MORTAR
CONCRETE BLOCK WALL

K/S300 WALL MOVEMENT JOINT DETAIL (M.J.)
SCALE: NTS

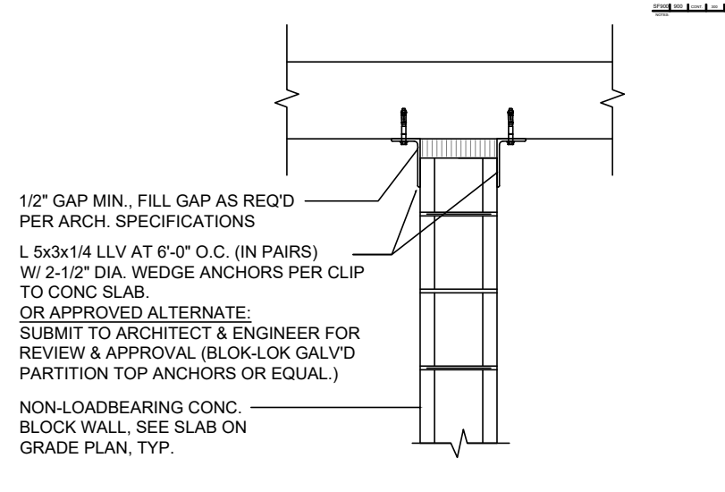
1/2" GAP MIN., FILL GAP AS REQ'D PER ARCH. SPECIFICATIONS
L 5x3x1/4 LLV AT 6'-0" O.C. (IN PAIRS) W/ 2-1/2" DIA. WEDGE ANCHORS PER CLIP TO CONC SLAB.
OR APPROVED ALTERNATE:
SUBMIT TO ARCHITECT & ENGINEER FOR REVIEW & APPROVAL (BLOK-LOK GALV'D PARTITION TOP ANCHORS OR EQUAL.)
NON-LOADBEARING CONC. BLOCK WALL, SEE SLAB ON GRADE PLAN, TYP.

L/S300 WALL LATERAL SUPPORT DETAIL NON-LOADBEARING
SCALE: 3/4" = 1'-0"

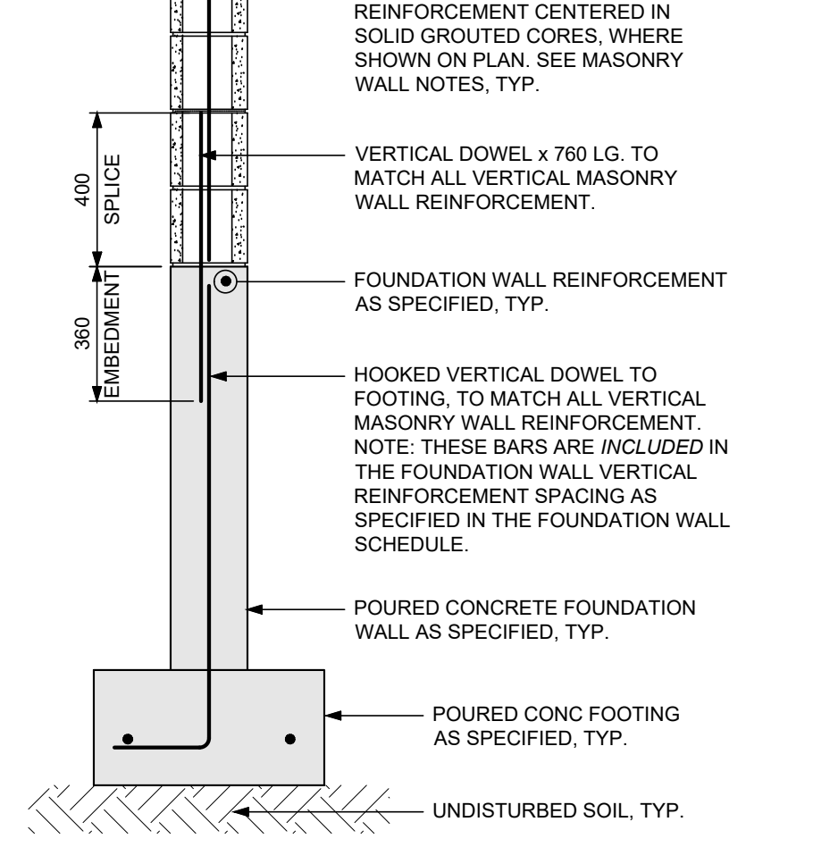
CONC BLOCK WALL AS SPECIFIED, TYP.
BLOCK WALL VERTICAL REINFORCEMENT CENTERED IN SOLID GROUTED CORES, WHERE SHOWN ON PLAN. SEE MASONRY WALL NOTES, TYP.
VERTICAL DOWEL x 760 LG. TO MATCH ALL VERTICAL MASONRY WALL REINFORCEMENT.
FOUNDATION WALL REINFORCEMENT AS SPECIFIED, TYP.
HOOKED VERTICAL DOWEL TO FOOTING, TO MATCH ALL VERTICAL MASONRY WALL REINFORCEMENT. NOTE: THESE BARS ARE INCLUDED IN THE FOUNDATION WALL VERTICAL REINFORCEMENT SPACING AS SPECIFIED IN THE FOUNDATION WALL SCHEDULE.
POURED CONCRETE FOUNDATION WALL AS SPECIFIED, TYP.
POURED CONC FOOTING AS SPECIFIED, TYP.
UNDISTURBED SOIL, TYP.
400 SPLICE
360 EMBEDMENT

M/S300 TYPICAL MASONRY WALL REINFORCEMENT SPLICE DETAIL TO FOUNDATION.
SCALE: 1:20

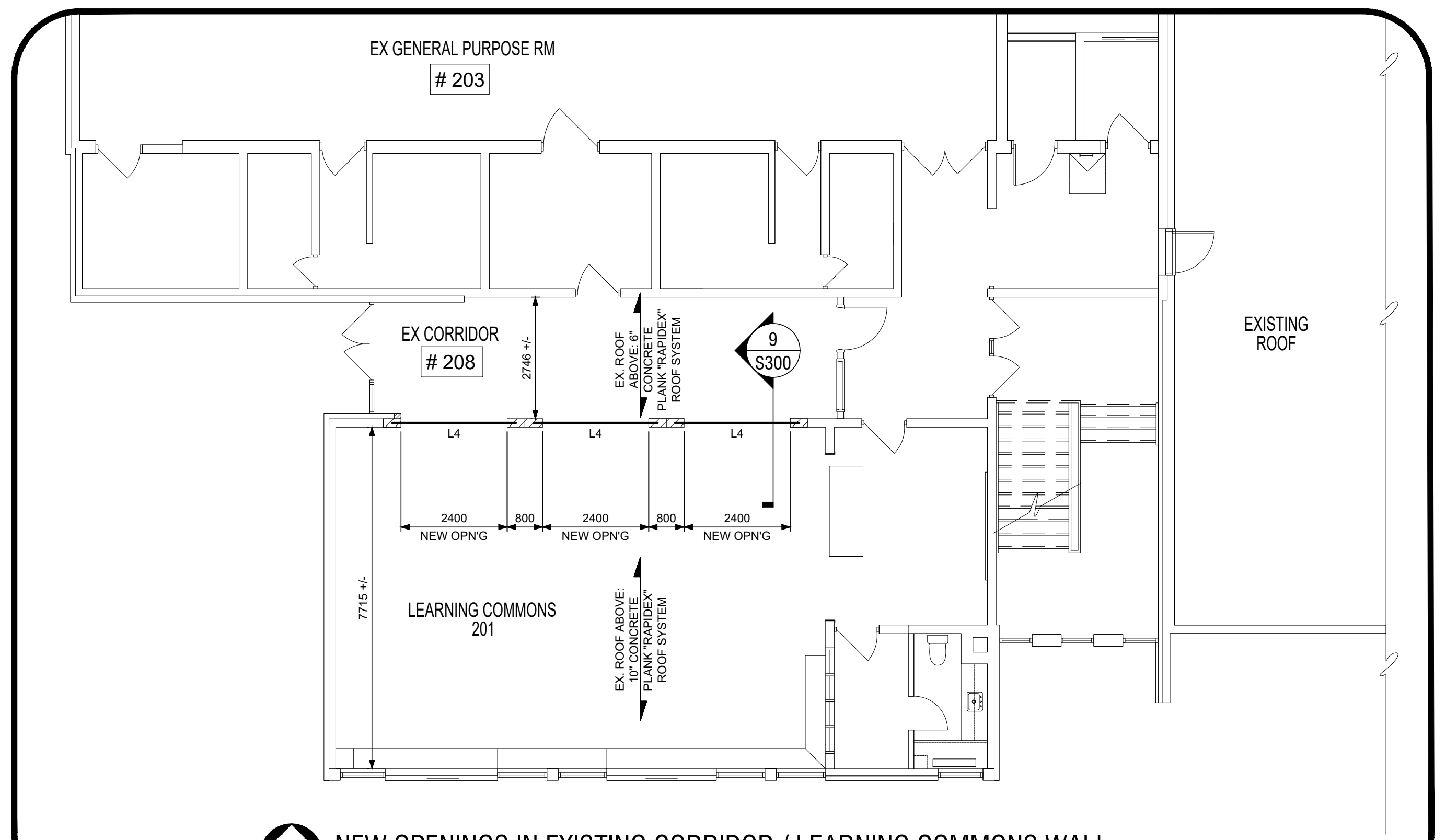
EX GENERAL PURPOSE RM
# 203
EX CORRIDOR
# 208
EXISTING ROOF
LEARNING COMMONS 201
EX. ROOF ABOVE: 10" CONCRETE PLANK "RAPIDEX" ROOF SYSTEM
EX. ROOF ABOVE: 6" CONCRETE PLANK "RAPIDEX" ROOF SYSTEM
NEW OPN'G
2400
800
L4
9
S300

NEW OPENINGS IN EXISTING CORRIDOR / LEARNING COMMONS WALL
SCALE: 1:100

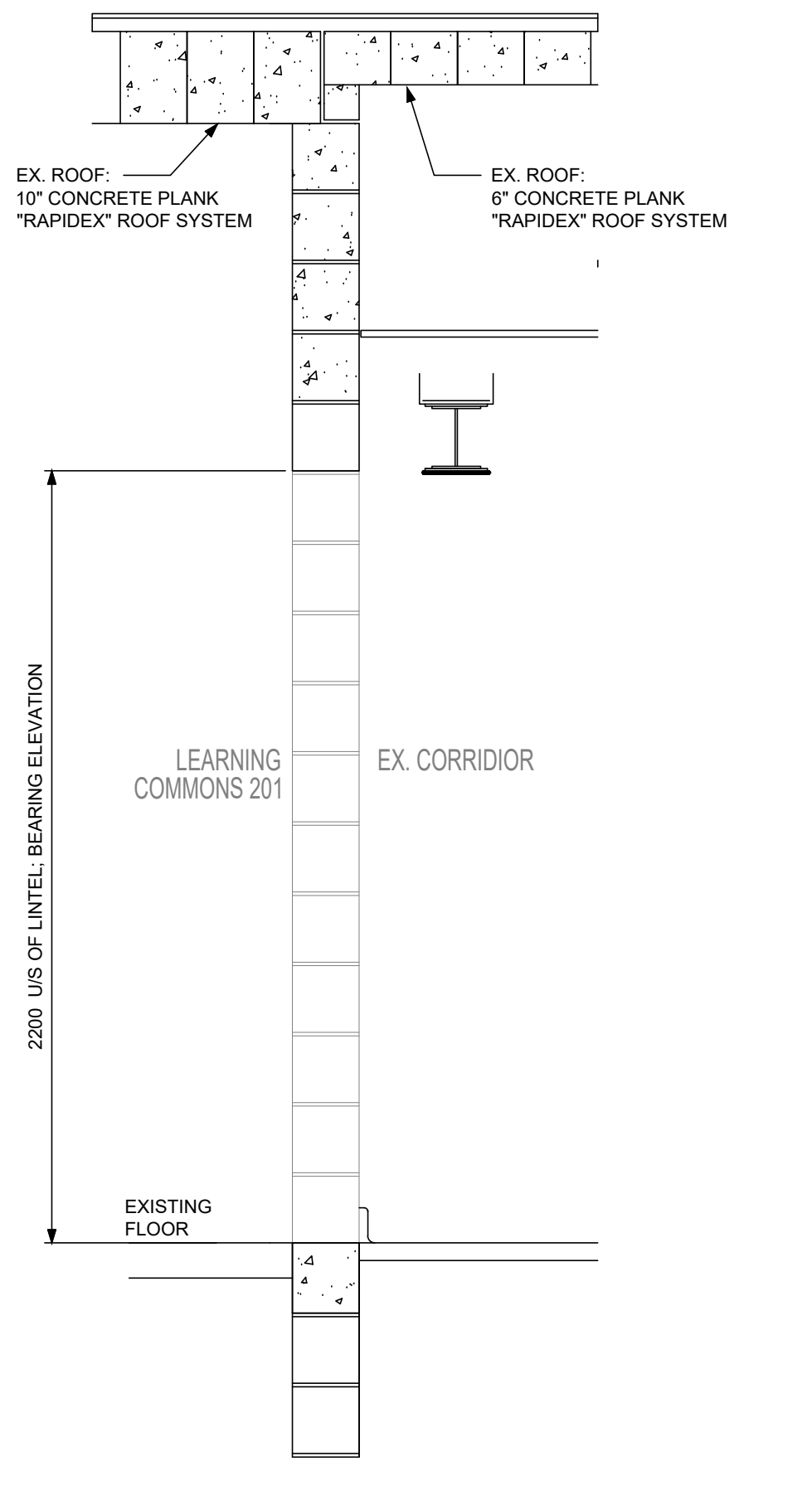
EX. ROOF: 10" CONCRETE PLANK "RAPIDEX" ROOF SYSTEM
EX. ROOF: 6" CONCRETE PLANK "RAPIDEX" ROOF SYSTEM
LEARNING COMMONS 201
EX. CORRIDOR
EXISTING FLOOR
2200 U/S OF LINTEL BEARING ELEVATION

9/S300 SECTION
SCALE: 1:20

MUNICIPAL APPROVAL STAMP

jp thomson architects ltd
2001 Provincial Rd, Unit 6A,
Windsor, Ontario, N8W 5V7
www.jpthomson.com
t 519-256-3131

SEAL:
May 15, 2026
P.A. ALEO
100104366

CONSULTANT:

ALEO ASSOCIATES INC.
CONSULTING ENGINEERS
325 DEVONSHIRE RD., WINDSOR, ONTARIO, CANADA N8Y 2L3
TELEPHONE (519) 254-7926 FACSIMILE (519) 254-0895

CONSULTANT SEAL:

DRAWING INFO:
A DETAIL NO.
B LOCATION SHEET
C DETAILED ON

COPYRIGHT:

ISSUANCES:

No.	Issued for/Description	Date
1.	80% OWNER REVIEW	2025-08-11
2.	PERMIT	2025-11-28
3.	PERMIT RE-ISSUE	2026-03-02
4.	TENDER	2026-04-09
5.	PERMIT RE-ISSUE	2026-05-15

CLIENT:
Waterloo Catholic District School Board
480 Dutton Drive,
Waterloo, ON N2L 4C6

PROJECT TITLE:
St. Gregory Catholic Elementary School Addition and Renovations
34 Osborne St.
Cambridge, ON
N1S 3H1

DRAWING TITLE:
SLAB ON GRADE PLAN + NON LOAD BEARING MASONRY WALL

LOAD BEARING MASONRY WALL PLAN

NEW OPENINGS IN EXISTING CORRIDOR WALL

DATE: 2026-03-02
DRAWN BY: SAS
SCALE: AS NOTED
PROJECT NO: **25-106**
ALEO PROJECT NO: **8983**
DRAWING NO: **S-300**

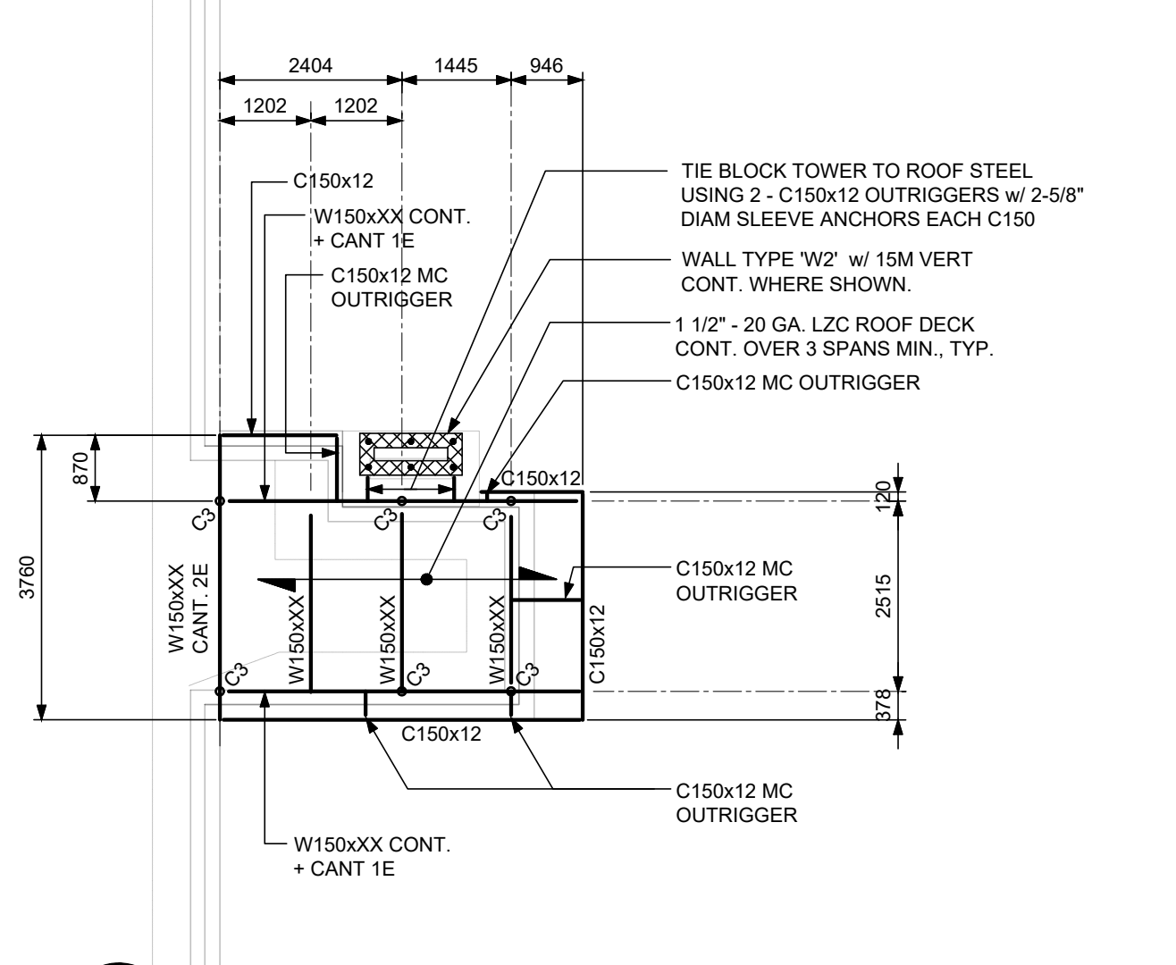
2404
1445
946
1202
1202
C150x12
W150xXX CONT.
+ CANT 1E
C150x12 MC
OUTRIGGER
TIE BLOCK TOWER TO ROOF STEEL USING 2 - C150x12 OUTRIGGERS w/ 2-5/8" DIAM SLEEVE ANCHORS EACH C150
WALL TYPE 'W2' w/ 15M VERT CONT. WHERE SHOWN.
1 1/2" - 20 GA. LZC ROOF DECK CONT. OVER 3 SPANS MIN., TYP.
C150x12 MC OUTRIGGER
C150x12
870
3760
W150xXX CANT. 2E
W150xXX
W150xXX
W150xXX
C150x12
C150x12 MC OUTRIGGER
120
2515
378
C150x12
C150x12 MC OUTRIGGER
W150xXX CONT.
+ CANT 1E

ROOF FRAMING PLAN; VESTIBULE 001

SCALE: 1:100

TOS ELEVATION +3235. REFER TO ARCHITECTURAL FOR SECTIONS

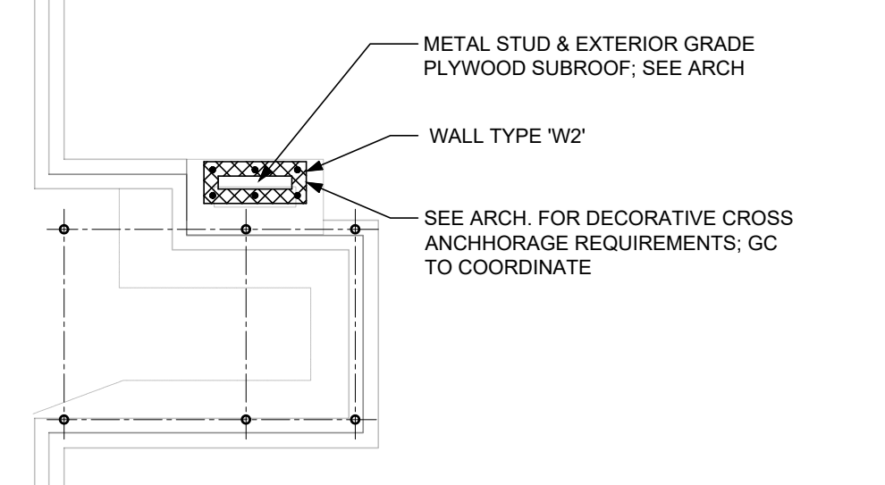
METAL STUD & EXTERIOR GRADE PLYWOOD SUBROOF; SEE ARCH
WALL TYPE 'W2'
SEE ARCH. FOR DECORATIVE CROSS ANCHHORAGE REQUIREMENTS; GC TO COORDINATE

VESTIBULE 001 MASONRY TOWER PLAN

SCALE: 1:100

TOP OF TOWER BLOCK ELEVATION + 5600. REFER TO ARCHITECTURAL FOR SECTIONS

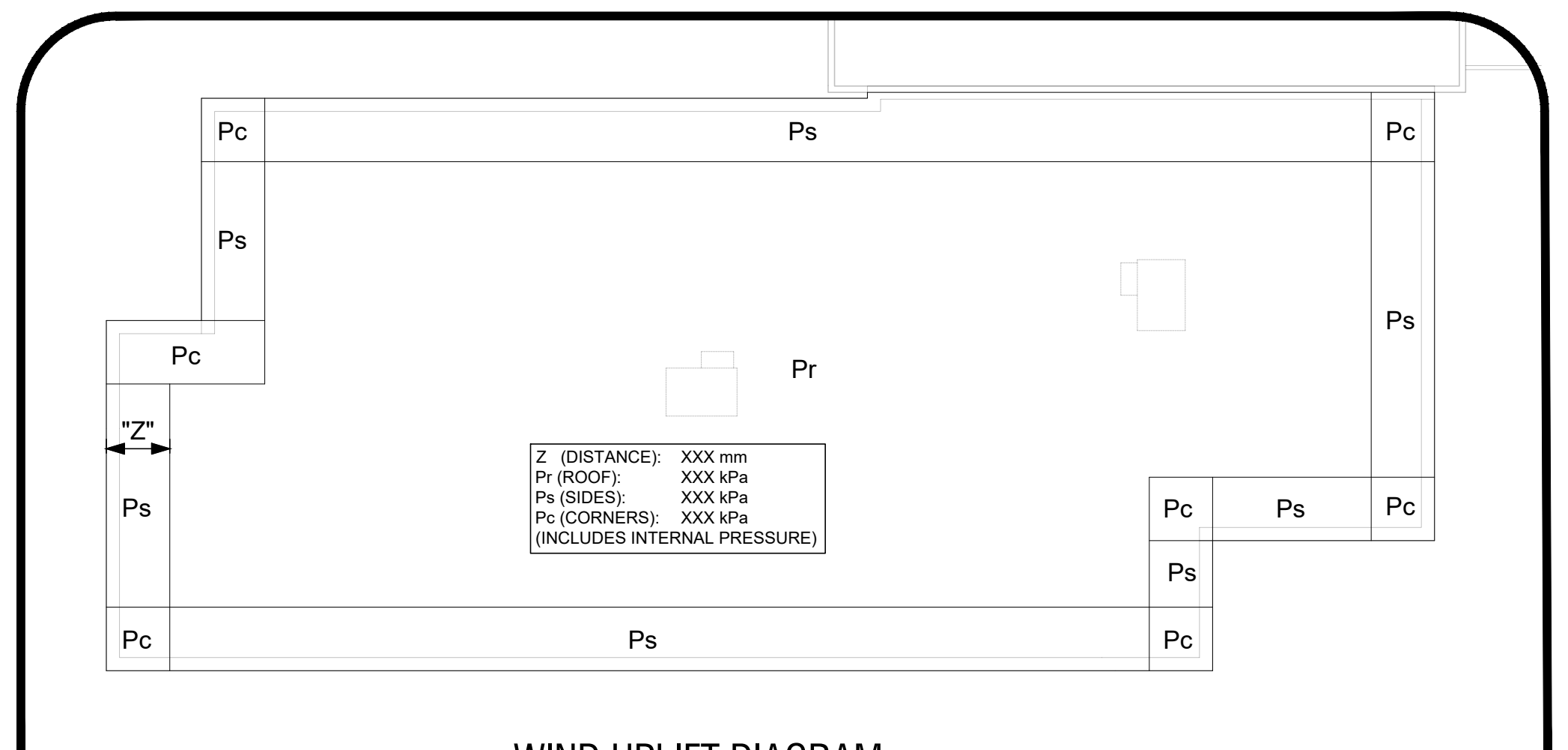
Pc
Ps
Pc
Ps
Pc
Pr
"Z"
Ps
Ps
Pc
Ps
Pc
Ps
Pc
Ps
Pc
Z (DISTANCE): XXX mm
Pr (ROOF): XXX kPa
Ps (SIDES): XXX kPa
Pc (CORNERS): XXX kPa
(INCLUDES INTERNAL PRESSURE)

WIND UPLIFT DIAGRAM

SCALE: NTS

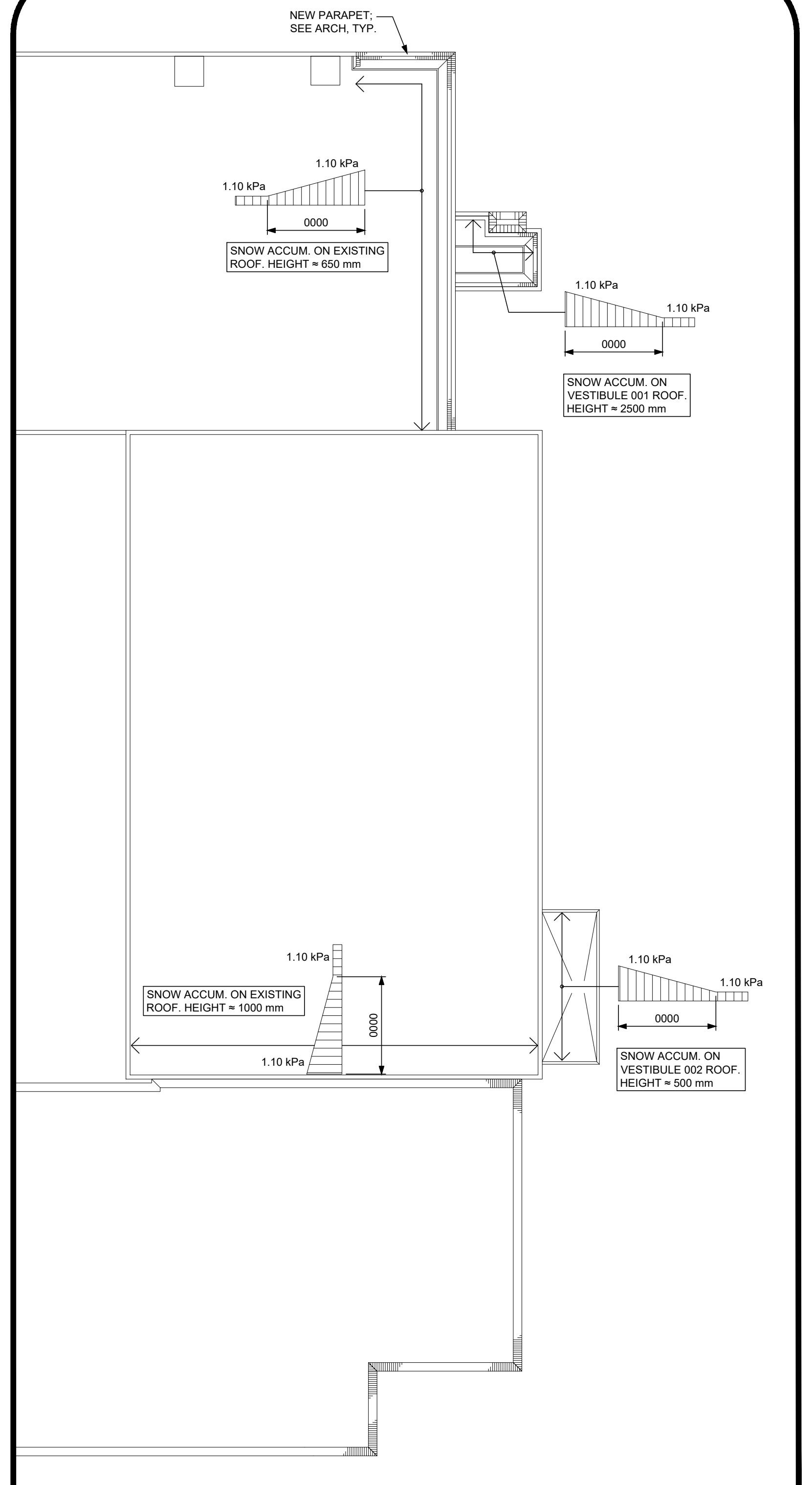
NEW PARAPET; SEE ARCH, TYP.
1.10 kPa
1.10 kPa
0000
SNOW ACCUM. ON EXISTING ROOF. HEIGHT ≈ 650 mm
1.10 kPa
1.10 kPa
0000
SNOW ACCUM. ON VESTIBULE 001 ROOF. HEIGHT ≈ 2500 mm
1.10 kPa
SNOW ACCUM. ON EXISTING ROOF. HEIGHT ≈ 1000 mm
0000
1.10 kPa
1.10 kPa
1.10 kPa
0000
SNOW ACCUM. ON VESTIBULE 002 ROOF. HEIGHT ≈ 500 mm

SNOW ACCUMULATION DIAGRAM

SCALE: 1:200

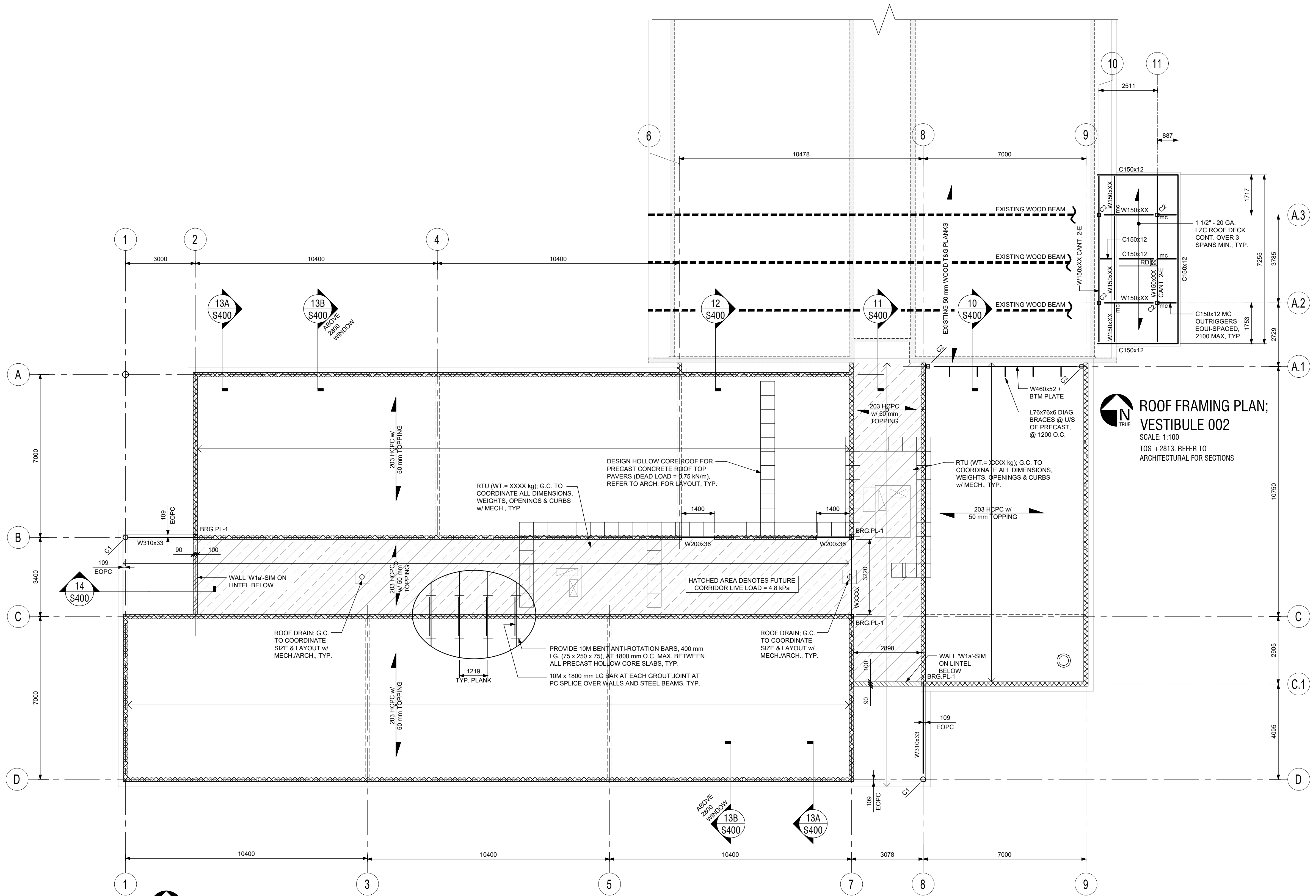
6
8
9
10
11
2511
887
10478
7000
1
2
4
3000
10400
10400
13A S400
13B S400 ABOVE 2800 WINDOW
12 S400
11 S400
10 S400
EXISTING WOOD BEAM
EXISTING WOOD BEAM
EXISTING WOOD BEAM
EXISTING 50 mm WOOD T&G PLANKS
W150xXX CANT. 2-E
C150x12
W150xXX
C150x12
C150x12
RD
W150xXX CANT. 2-E
1 1/2" - 20 GA. LZC ROOF DECK CONT. OVER 3 SPANS MIN., TYP.
C150x12 MC OUTRIGGERS EQUI-SPACED, 2100 MAX, TYP.
1717
7255
3785
1753
2729
A.3
A.2
A.1
A
B
C
C.1
D
7000
3400
7000
10750
2905
4095
203 HCPC w/ 50 mm TOPPING
W460x52 + BTM PLATE
L76x76x6 DIAG. BRACES @ U/S OF PRECAST, @ 1200 O.C.
DESIGN HOLLOW CORE ROOF FOR PRECAST CONCRETE ROOF TOP PAVERS (DEAD LOAD = 0.75 kN/m), REFER TO ARCH. FOR LAYOUT, TYP.
RTU (WT.= XXXX kg); G.C. TO COORDINATE ALL DIMENSIONS, WEIGHTS, OPENINGS & CURBS w/ MECH., TYP.
1400
1400
BRG.PL-1
W310x33
109 EOPC
C1
90
100
W200x36
W200x36
14 S400
WALL 'W1a'-SIM ON LINTEL BELOW
HATCHED AREA DENOTES FUTURE CORRIDOR LIVE LOAD = 4.8 kPa
W XXXx
3220
ROOF DRAIN; G.C. TO COORDINATE SIZE & LAYOUT w/ MECH./ARCH., TYP.
PROVIDE 10M BENT ANTI-ROTATION BARS, 400 mm LG. (75 x 250 x 75), AT 1800 mm O.C. MAX. BETWEEN ALL PRECAST HOLLOW CORE SLABS, TYP.
10M x 1800 mm LG BAR AT EACH GROUT JOINT AT PC SPLICE OVER WALLS AND STEEL BEAMS, TYP.
1219 TYP. PLANK
2898
WALL 'W1a'-SIM ON LINTEL BELOW
BRG.PL-1
109 EOPC
W310x33
13B S400 ABOVE 2800 WINDOW
13A S400
10400
10400
10400
3078
7000
1
3
5
7
8
9

ROOF FRAMING PLAN; VESTIBULE 002

SCALE: 1:100

TOS +2813. REFER TO ARCHITECTURAL FOR SECTIONS

ROOF FRAMING PLAN

SCALE: 1:100

ROOF FRAMING NOTES:

1. REFER TO THE STRUCTURAL NOTES ON S100 AND THE SPECIFICATION FOR ADDITIONAL INFORMATION, TYP.
2. ROOF DESIGN LOADS. NOTE; THE ROOF IS DESIGNED TO BE A FUTURE SECOND FLOOR:

   LIVE LOADS:

CLASSROOMS (NON HATCHED AREAS)	2.4 kPa
CORRIDORS (HATCHED AREAS)	4.8 kPa
SEE PLAN FOR SNOW ACCUUMULATION	

   DEAD LOADS:

200 PRECAST HOLLOW CORE w/ 50 mm TOPPING	4.2 kPa
SUPERIMPOSED DEAD LOADS	1.0 kPa

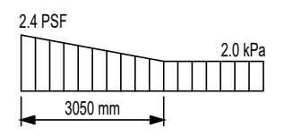
2.4 PSF
2.0 kPa
3050 mm

   SNOW ACCUMULATION DIAGRAM AROUND RTU'S

   NET SPECIFIED UPLIFT PRESSURE: SEE UPLIFT DIAGRAM

   MIN. SPECIFIED CONCENTRATED LIVE LOAD: 300 LBS (APPLIED IN 8" X 8" AREA) TYP. U.N.O.

3. ALLOWABLE LIVE LOAD DEFLECTION = L/480.
4. TYPICAL ROOF CONSTRUCTION: ROOFING SYSTEM AS SPECIFIED (SEE ARCH.) ON 200 PRECAST HOLLOWCORE SLABS w/ 50 mm TOPPING.
5. PRECAST CONCRETE HOLLOWCORE SLABS SHALL HAVE 10M X 400 mm LG. (75x250x75) ANTI-ROTATION BARS AT 1800 mm O.C. TYP.
6. PRECAST SLAB CONTRACTOR SHALL DESIGN & PROVIDE ALL STEEL HANGERS REQUIRED TO SUPPORT CUT SLABS AT OPENINGS AS REQUIRED, TYP.
7. THE GENERAL CONTRACTOR SHALL PROVIDE DRY PACK GROUT BELOW PRECAST FLOOR & BALCONY CAMBERS AND GAPS WHERE SPECIFIED IN THE STRUCTURAL SECTION DETAILS. GROUT SHALL BE CURED PRIOR TO CONSTRUCTING BEARING WALLS ABOVE TYP..

PRECAST HOLLOW CORE NOTES:

1. PRECAST PRE-STRESSED HOLLOWCORE SLABS TO BE DESIGNED IN ACCORDANCE WITH CSA SPECIFICATIONS CSA-A23.3, LATEST EDITION.
2. PRECAST PRE-STRESSED HOLLOWCORE SLABS SUPPLIER TO SUBMIT SHOP DRAWINGS FULLY COORDINATED WITH MECHANICAL FOR REVIEW BY CONSULTANT TEAM. SHOP DRAWINGS SHALL BE STAMPED BY A LICENSED PROFESSIONAL ENGINEER INDICATED ALL DESIGN LOADING CRITERIA.
3. PROVIDE A MINIMUM OF ONE ADDITIONAL HIGH-STRENGTH STEEL STRAND ABOVE THE MINIMUM OBC DESIGN REQUIREMENTS INDICATED ON THE STRUCTURAL DRAWINGS.
4. COORDINATE WITH ALL OTHER RELEVANT TRADES REGARDING OPENINGS, SLEEVES, DAMPERS, REINFORCING STEEL ANCHORS, INSERTS ETC.
5. PROVIDE LEVEL SURFACES AT BEARING WALLS C/W COORDINATED CONNECTIONS.
6. GROUT KEYS TO BE GROUTED SOLID FULL LENGTH, TYP.
7. PROVIDE ENGINEERED SLAB HANGERS AS REQUIRED AT OPENINGS.
8. GROUT ENDS OF HOLLOWCORE AT ALL HVAC FLOOR OPENINGS FOR A MINIMUM LENGTH OF 1'-0", TYP.
9. STYRENE PLUGS TO BE INSTALLED ON OPEN ENDS OF PRECAST, TYP.
10. PROVIDER CONTINUOUS BEARING PADS AT ALL ENDS OF HOLLOWCORE PLANKS, TYP.
11. HOLLOWCORE SUPPLIER TO PROVIDE A GENERAL REVIEW LETTER STAMPED AND SIGNED BY A PROFESSIONAL ENGINEER FOR THE HOLLOWCORE SLAB INSTALLATION.
12. CONNECT PRECAST HOLLOWCORE PLANKS TO STRUCTURE AS SPECIFIED IN SECTIONS AND DETAILS ON THE STRUCTURAL DRAWINGS.
13. THE GENERAL CONTRACTOR SHALL COORDINATE, SUPPLY & INSTALL STEEL SHIMS AND DRYPACK GROUT INFILL BELOW ALL PLANK CAMBERS, GAPS AND WHERE INDICATED ON THE STRUCTURAL SECTIONS, TYP.

IMPORTANT TYPICAL NOTES:

1. COORDINATE W/ ARCH'L & MECH'L DRAWINGS FOR SIZE & LOCATION OF ALL OPENINGS & PENETRATIONS IN WALLS & SLABS.
2. REFER TO PRECAST CONC. DWG'S FOR ALL PRECAST ELEMENTS INCLUDING PROFILE, CONNECTIONS, HARDWARE, DETAILS, ETC.
3. COORDINATE ALL ELEVATIONS OF PRECAST SLABS W/ ARCH'L.
4. COORDINATE ALL EDGES OF PRECAST SLABS W/ ARCH'L.

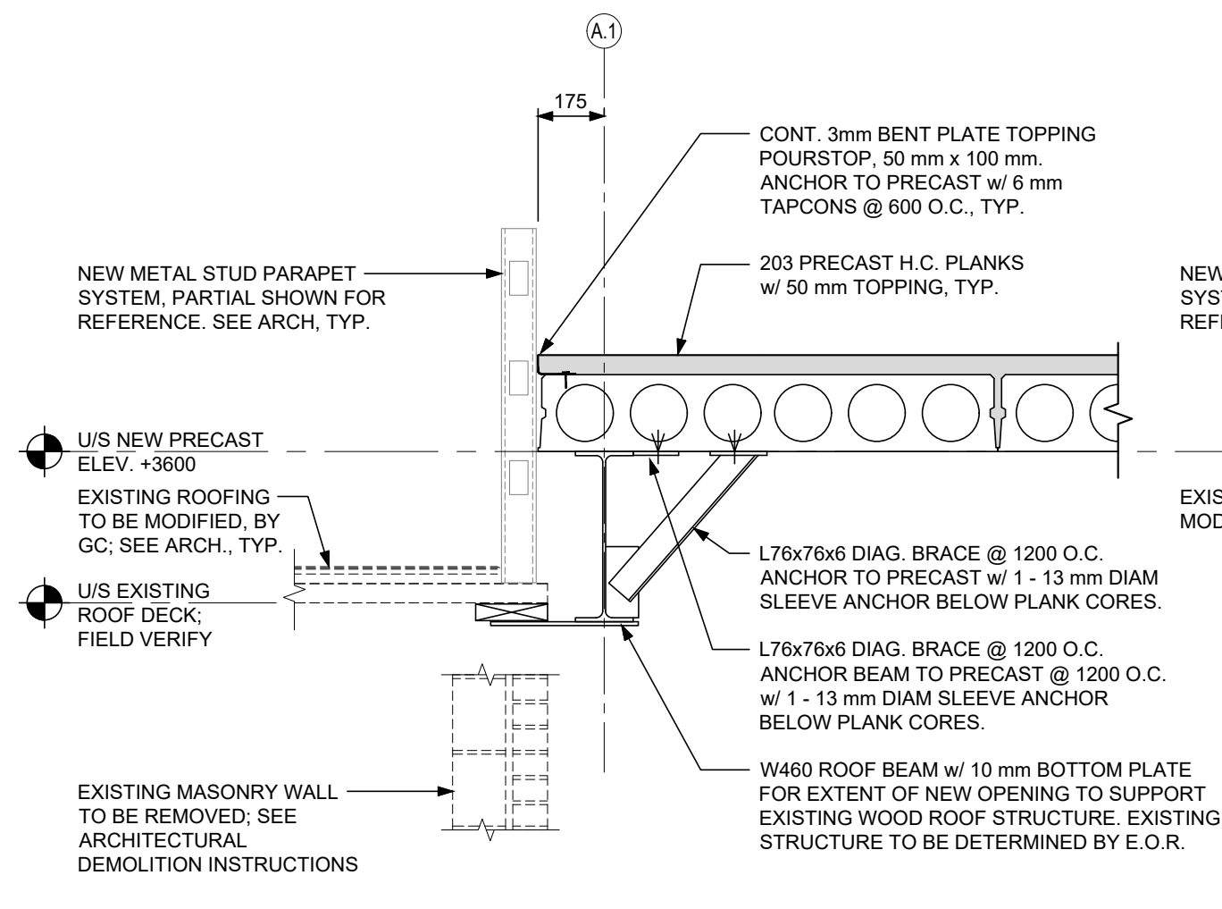
A.1
175
CONT. 3mm BENT PLATE TOPPING POURSTOP, 50 mm x 100 mm. ANCHOR TO PRECAST w/ 6 mm TAPCONS @ 600 O.C., TYP.
203 PRECAST H.C. PLANKS w/ 50 mm TOPPING, TYP.
NEW METAL STUD PARAPET SYSTEM, PARTIAL SHOWN FOR REFERENCE. SEE ARCH, TYP.
U/S NEW PRECAST ELEV. +3600
EXISTING ROOFING TO BE MODIFIED, BY GC; SEE ARCH., TYP.
U/S EXISTING ROOF DECK; FIELD VERIFY
L76x76x6 DIAG. BRACE @ 1200 O.C. ANCHOR TO PRECAST w/ 1 - 13 mm DIAM SLEEVE ANCHOR BELOW PLANK CORES.
L76x76x6 DIAG. BRACE @ 1200 O.C. ANCHOR BEAM TO PRECAST @ 1200 O.C. w/ 1 - 13 mm DIAM SLEEVE ANCHOR BELOW PLANK CORES.
W460 ROOF BEAM w/ 10 mm BOTTOM PLATE FOR EXTENT OF NEW OPENING TO SUPPORT EXISTING WOOD ROOF STRUCTURE. EXISTING STRUCTURE TO BE DETERMINED BY E.O.R.
EXISTING MASONRY WALL TO BE REMOVED; SEE ARCHITECTURAL DEMOLITION INSTRUCTIONS

10 / S400 SECTION

SCALE: 1:20

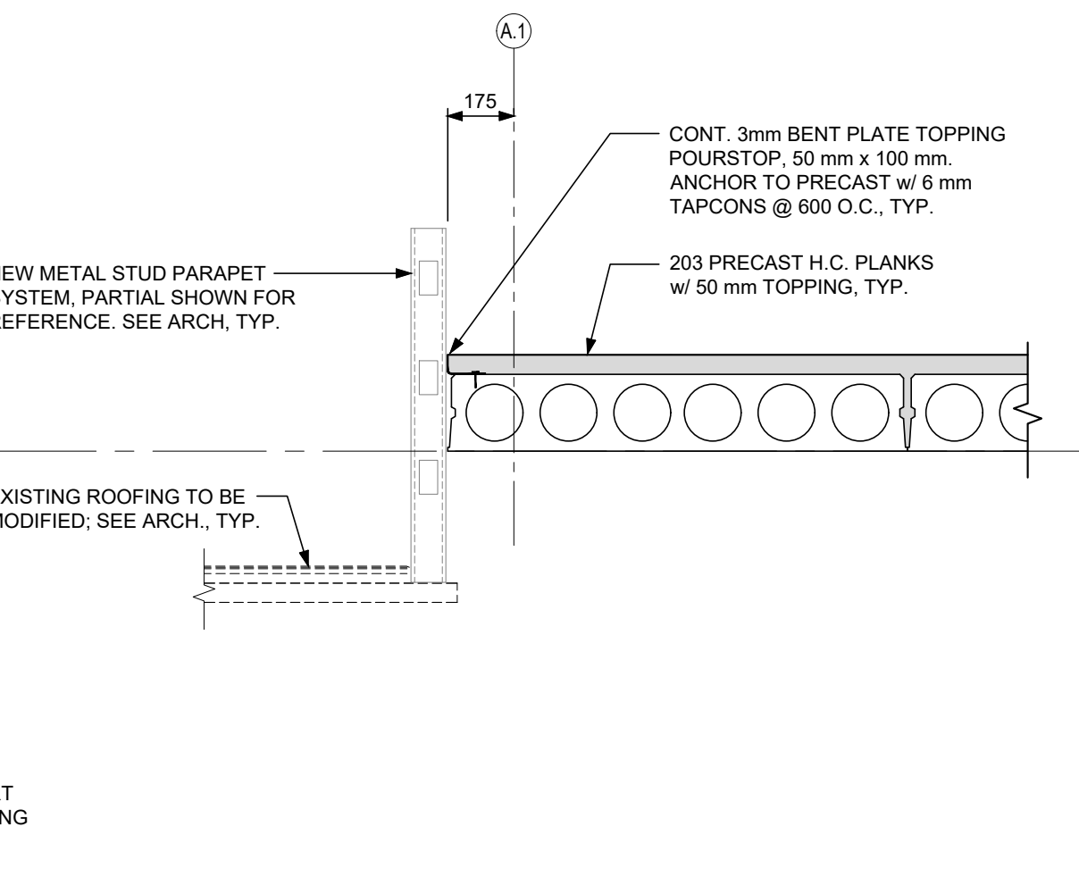
A.1
175
CONT. 3mm BENT PLATE TOPPING POURSTOP, 50 mm x 100 mm. ANCHOR TO PRECAST w/ 6 mm TAPCONS @ 600 O.C., TYP.
203 PRECAST H.C. PLANKS w/ 50 mm TOPPING, TYP.
NEW METAL STUD PARAPET SYSTEM, PARTIAL SHOWN FOR REFERENCE. SEE ARCH, TYP.
EXISTING ROOFING TO BE MODIFIED; SEE ARCH., TYP.

11 / S400 SECTION

SCALE: 1:20

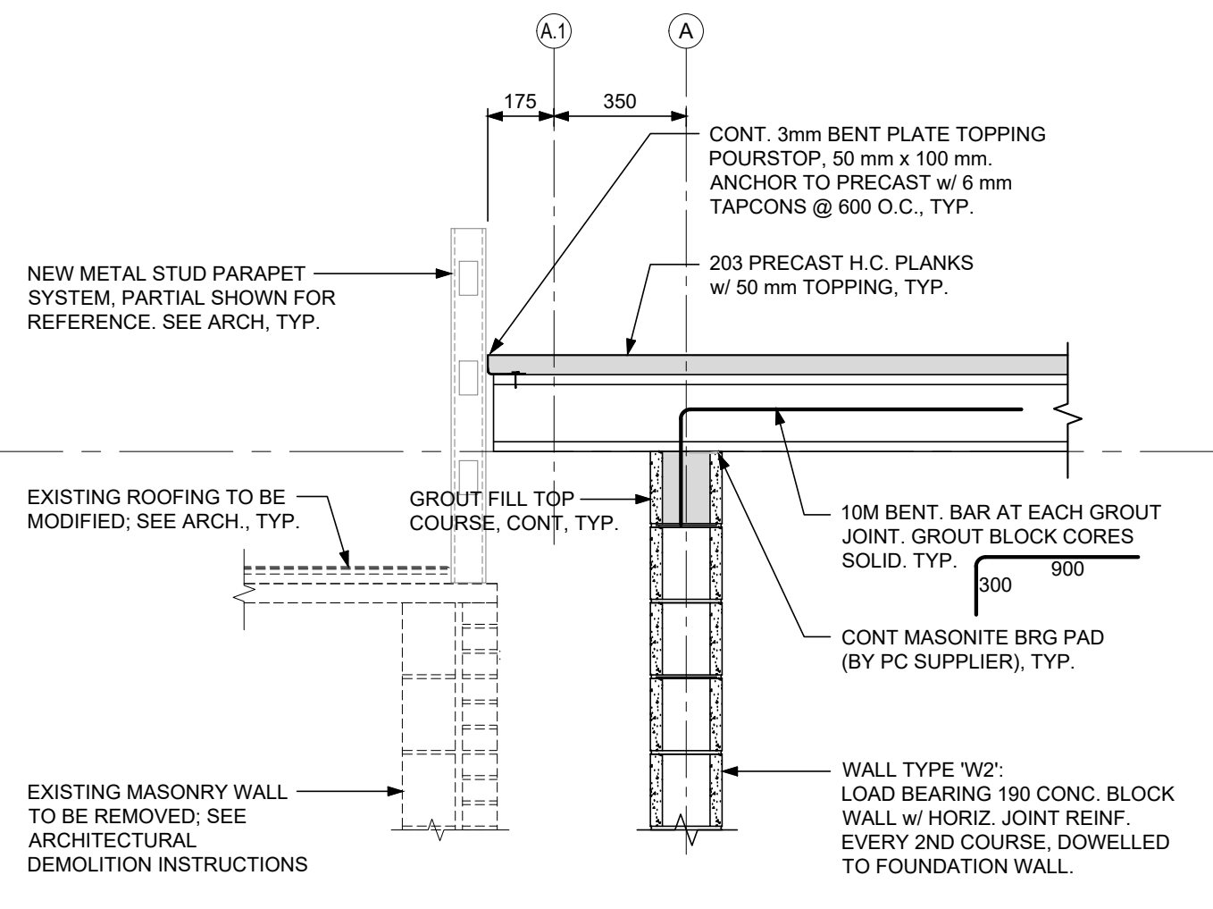
A.1
A
175
350
CONT. 3mm BENT PLATE TOPPING POURSTOP, 50 mm x 100 mm. ANCHOR TO PRECAST w/ 6 mm TAPCONS @ 600 O.C., TYP.
NEW METAL STUD PARAPET SYSTEM, PARTIAL SHOWN FOR REFERENCE. SEE ARCH, TYP.
203 PRECAST H.C. PLANKS w/ 50 mm TOPPING, TYP.
EXISTING ROOFING TO BE MODIFIED; SEE ARCH., TYP.
GROUT FILL TOP COURSE, CONT, TYP.
10M BENT. BAR AT EACH GROUT JOINT. GROUT BLOCK CORES SOLID. TYP.
300
900
CONT MASONITE BRG PAD (BY PC SUPPLIER), TYP.
EXISTING MASONRY WALL TO BE REMOVED; SEE ARCHITECTURAL DEMOLITION INSTRUCTIONS
WALL TYPE 'W2': LOAD BEARING 190 CONC. BLOCK WALL w/ HORIZ. JOINT REINF. EVERY 2ND COURSE, DOWELLED TO FOUNDATION WALL.

12 / S400 SECTION

SCALE: 1:20

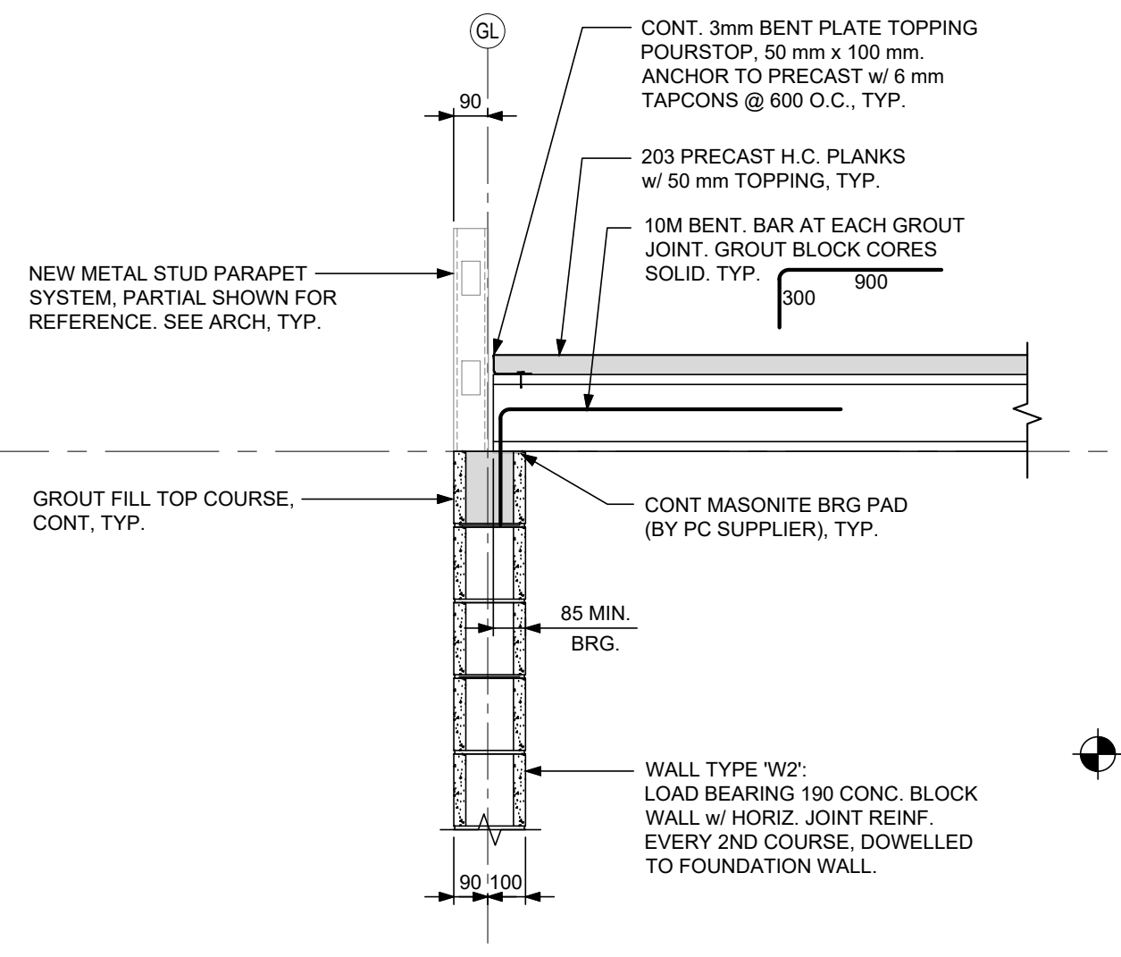
GL
90
CONT. 3mm BENT PLATE TOPPING POURSTOP, 50 mm x 100 mm. ANCHOR TO PRECAST w/ 6 mm TAPCONS @ 600 O.C., TYP.
203 PRECAST H.C. PLANKS w/ 50 mm TOPPING, TYP.
10M BENT. BAR AT EACH GROUT JOINT. GROUT BLOCK CORES SOLID. TYP.
300
900
NEW METAL STUD PARAPET SYSTEM, PARTIAL SHOWN FOR REFERENCE. SEE ARCH, TYP.
GROUT FILL TOP COURSE, CONT, TYP.
CONT MASONITE BRG PAD (BY PC SUPPLIER), TYP.
85 MIN. BRG.
WALL TYPE 'W2': LOAD BEARING 190 CONC. BLOCK WALL w/ HORIZ. JOINT REINF. EVERY 2ND COURSE, DOWELLED TO FOUNDATION WALL.
90
100

13A / S400 SECTION

SCALE: 1:20

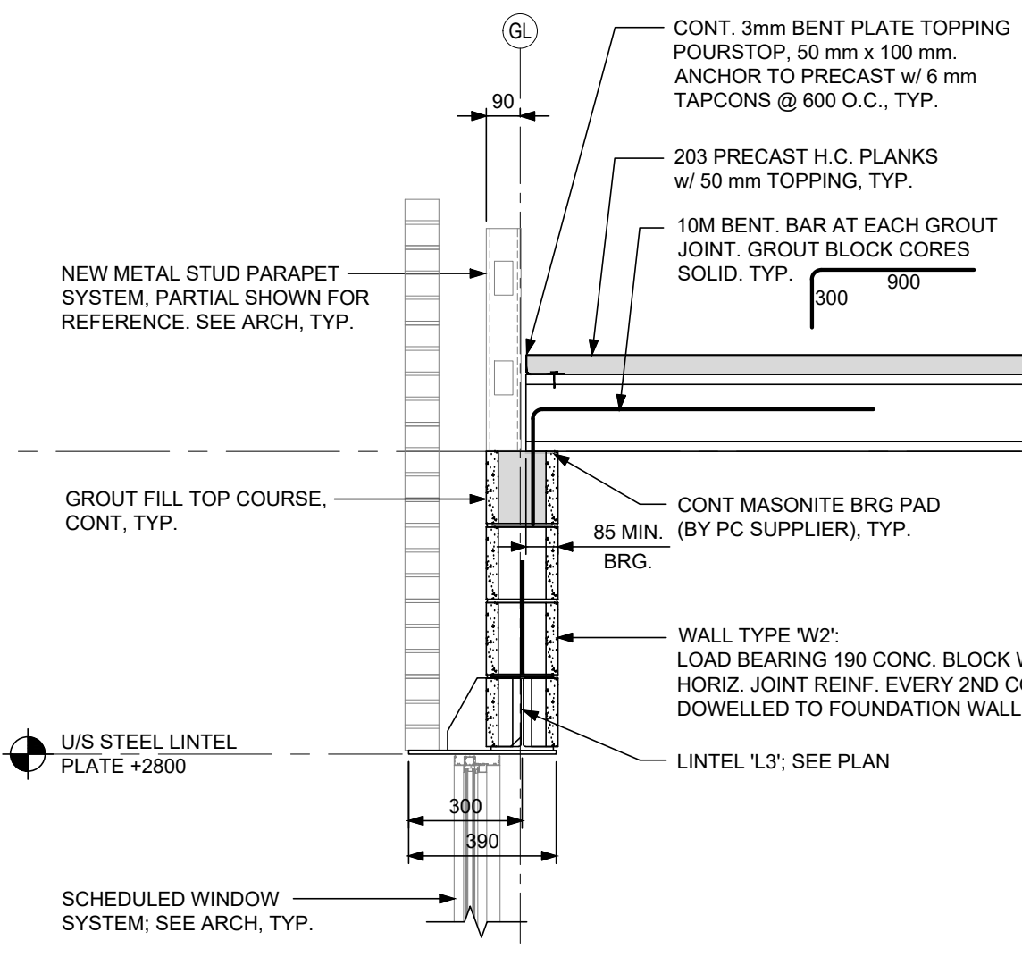
GL
90
CONT. 3mm BENT PLATE TOPPING POURSTOP, 50 mm x 100 mm. ANCHOR TO PRECAST w/ 6 mm TAPCONS @ 600 O.C., TYP.
203 PRECAST H.C. PLANKS w/ 50 mm TOPPING, TYP.
10M BENT. BAR AT EACH GROUT JOINT. GROUT BLOCK CORES SOLID. TYP.
300
900
NEW METAL STUD PARAPET SYSTEM, PARTIAL SHOWN FOR REFERENCE. SEE ARCH, TYP.
GROUT FILL TOP COURSE, CONT, TYP.
CONT MASONITE BRG PAD (BY PC SUPPLIER), TYP.
85 MIN. BRG.
WALL TYPE 'W2': LOAD BEARING 190 CONC. BLOCK WALL w/ HORIZ. JOINT REINF. EVERY 2ND COURSE, DOWELLED TO FOUNDATION WALL.
U/S STEEL LINTEL PLATE +2800
LINTEL 'L3'; SEE PLAN
300
390
SCHEDULED WINDOW SYSTEM; SEE ARCH, TYP.

13B / S400 SECTION

SCALE: 1:20

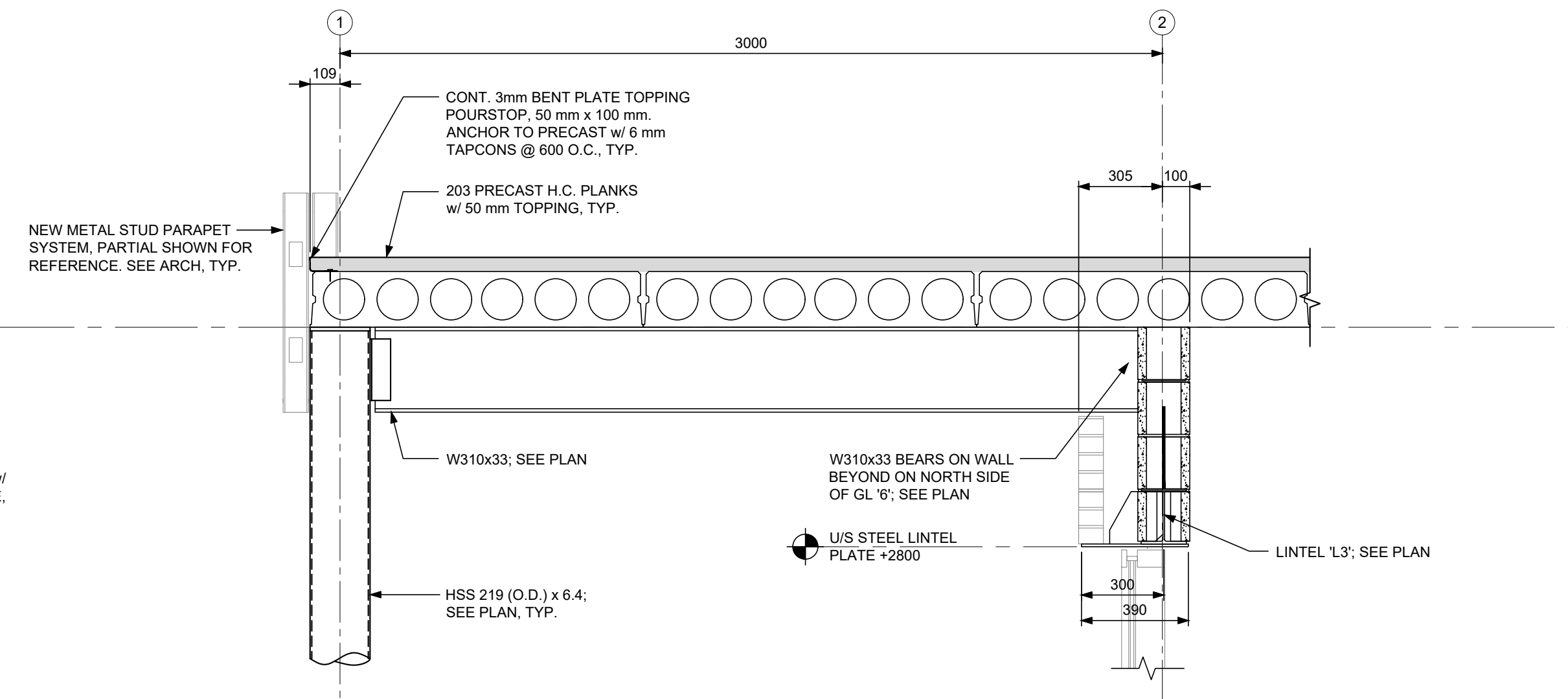
1
2
3000
109
CONT. 3mm BENT PLATE TOPPING POURSTOP, 50 mm x 100 mm. ANCHOR TO PRECAST w/ 6 mm TAPCONS @ 600 O.C., TYP.
203 PRECAST H.C. PLANKS w/ 50 mm TOPPING, TYP.
305
100
NEW METAL STUD PARAPET SYSTEM, PARTIAL SHOWN FOR REFERENCE. SEE ARCH, TYP.
W310x33; SEE PLAN
W310x33 BEARS ON WALL BEYOND ON NORTH SIDE OF GL '6'; SEE PLAN
U/S STEEL LINTEL PLATE +2800
LINTEL 'L3'; SEE PLAN
HSS 219 (O.D.) x 6.4; SEE PLAN, TYP.
300
390

14 / S400 SECTION

SCALE: 1:20

MUNICIPAL APPROVAL STAMP

jp thomson architects ltd
2001 Provincial Rd, Unit 6A,
Windsor, Ontario, N8W 5V7
www.jpthomson.com
t 519-256-3131

SEAL:

May 15, 2026
P.A. ALEO
100104366

CONSULTANT:

ALEO ASSOCIATES INC.
CONSULTING ENGINEERS
325 DEVONSHIRE RD., WINDSOR, ONTARIO, CANADA N8Y 2L3
TELEPHONE (519) 254-7926 FACSIMILE (519) 254-0895

CONSULTANT SEAL:

DRAWING INFO:

A DETAIL NO.
B LOCATION SHEET
C DETAILED ON

COPYRIGHT:

ISSUANCES:

No.	Issued for/Description	Date
1.	80% OWNER REVIEW	2025-08-11
2.	PERMIT	2025-11-28
3.	PERMIT RE-ISSUE	2026-03-02
4.	TENDER	2026-04-09
5.	PERMIT RE-ISSUE	2026-05-15

CLIENT:

Waterloo Catholic District School Board
480 Dutton Drive,
Waterloo, ON N2L 4C6

PROJECT TITLE:

St. Gregory Catholic Elementary School Addition and Renovations

34 Osborne St.
Cambridge, ON
N1S 3H1

DRAWING TITLE:

ROOF FRAMING PLAN

DATE: 2026-03-02

DRAWN BY: SAS

SCALE: AS NOTED

PROJECT NO: **25-106**

ALEO PROJECT NO: **8983**

DRAWING NO: **S-400**

www.jpthomson.com